PROJECT:

HISTORIC FACADE RESTORATION

14 BEACON STREET
BOSTON, MA 02108

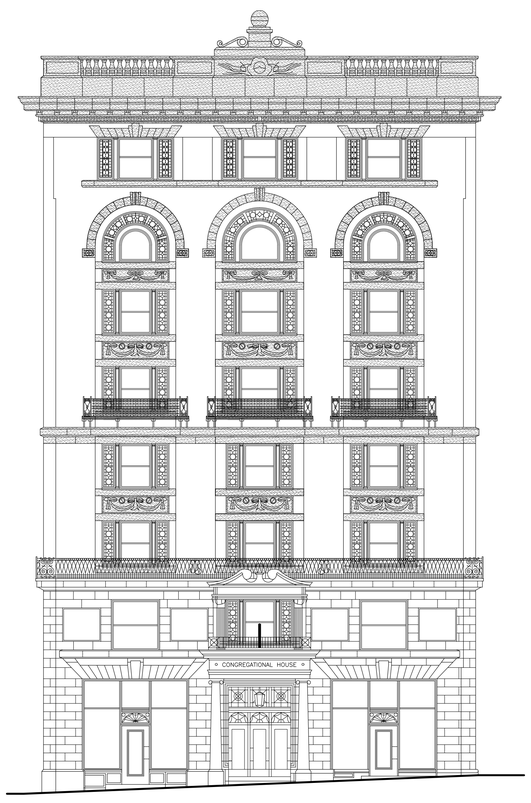

DRAWING LIST

SHEET NUMBER	DRAWING TITLE	HISTORIC REVIEW SUBMISSION - 04/25/18							DRAWING & SKETCHES ISSUED DURING CONSTRUCTION
GENERAL									
G-000	COVER SHEET	●							
ARCHITECTURAL									
A-101	PROPOSED ROOF PLAN	●							
A-201	EXISTING NORTH ELEVATIONS	●							
A-202	EXISTING SOUTH ELEVATIONS	●							
A-203	EXISTING WEST ELEVATION	●							
A-204	EXISTING EAST ELEVATIONS	●							
A-205	PROPOSED NORTH ELEVATIONS	●							
A-206	PROPOSED SOUTH ELEVATIONS	●							
A-207	PROPOSED WEST ELEVATION	●							
A-208	PROPOSED EAST ELEVATIONS	●							
A-501	EXISTING WOOD WINDOW DETAILS	●							
A-502	PROPOSED WOOD WINDOW DETAILS	●							
A-503	PROPOSED WOOD WINDOW DETAILS	●							
A-504	EXISTING METAL WINDOW DETAILS	●							
A-505	PROPOSED METAL WINDOW DETAILS	●							
A-901	SIGHT LINE STUDY	●							

CLIENT:

FAROS PROPERTIES

20 ASHBURTON PLACE, 2ND FLOOR
BOSTON, MA 02108

ARCHITECT:

WESSLING ARCHITECTS
AIA-CSI-BOCA
PRESIDENTS PLACE, 1250 HANCOCK STREET, SUITE 815N
QUINCY, MA 02169 TEL. 617-773-8150 FAX 617-773-4902
www.wesslingarchitects.com

18034 HISTORIC FACADE RESTORATION 14 BEACON STREET

COPYRIGHT © STEPHEN J. WESSLING ARCHITECTS, INC. 2018

NOT FOR CONSTRUCTION
PROFESSIONAL

HISTORIC REVIEW SUBMISSION 04/25/18

Drawing name: J:_SJW2018\18034 14 beacon st\0-construction documents\architectural\AutoCAD\14 beacon street exterior restoration\Sheets\18034 G-000 Cover Sheet.dwg
Apr 26, 2018 - 16:50pm
Xref:[]_jw\2018\18034 14 beacon st\0-construction documents\architectural\autocad\14 beacon street exterior restoration\Views\18034_Cover Elevation.dwg

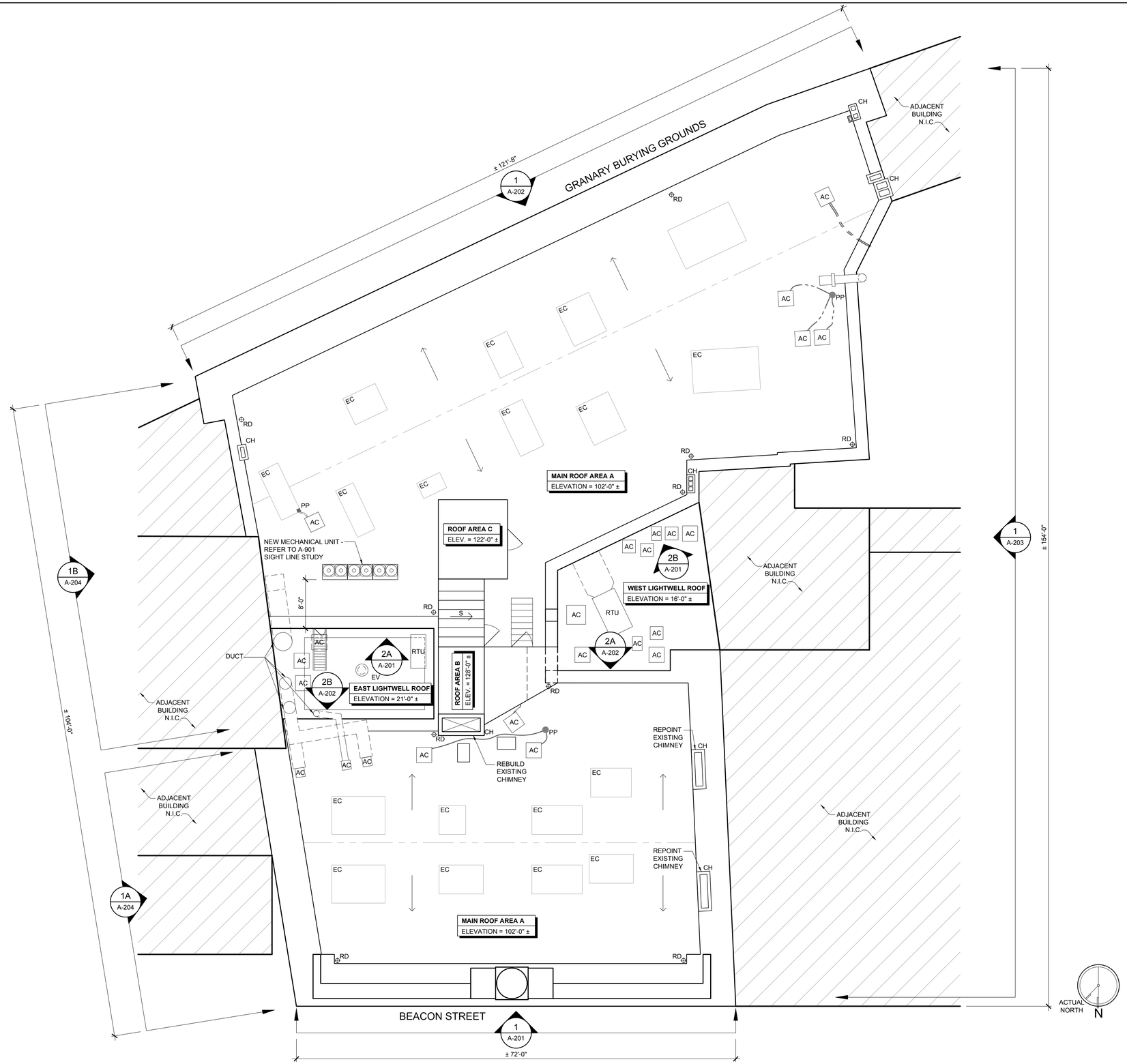

1 EXISTING ROOF PLAN
1/8"=1'-0"

ROOF PLAN LEGEND

RD	EXISTING ROOF DRAIN
PP	EXISTING ROOF PENETRATION
EV	EXISTING EXHAUST VENT
RTU	EXISTING WALL-MOUNTED ELECTRICAL PANEL
	EXISTING SURFACE RUN CONDUIT
	EXISTING ROOF ACCESS DOOR
	EXISTING PARAPET WALL
	EXISTING METAL STAIRS
AC	EXISTING SLEEPER MOUNTED AIR-CONDITIONING UNIT
CH	EXISTING BRICK CHIMNEY
EC	EXISTING CURB
S	EXISTING SLOPED SKYLIGHT
	SLOPE INDICATOR (DOWN)

WESSLING ARCHITECTS
AIA-CSI-BOCA
PRESIDENTS PLACE, 1250 HANCOCK STREET, SUITE 815N
QUINCY, MA 02169 TEL. 617-773-8150 FAX 617-773-4902
www.wesslingarchitects.com

CONSULTANTS:

PROJECT:

HISTORIC FACADE RESTORATION

14 BEACON STREET
BOSTON, MA 02108

CLIENT:

FAROS PROPERTIES

20 ASHBURTON PLACE, 2ND FLOOR
BOSTON, MA 02108

NOT FOR CONSTRUCTION

PROFESSIONAL

PREPARED BY A LICENSED ARCHITECT
Any changes to this item can be a violation of the law unless altered by a licensed architect. Any alteration made to this item must be accompanied by a specific description of change or changes made; date change was made, as well as the seal of the licensed architect who made or oversaw the changes.

MARK	DATE	DESCRIPTION
	04-25-18	HISTORIC REVIEW SUBMISSION

ISSUE:

PROJECT NO.:	18034
DRAWN BY:	LAW / PON
CHECKED BY:	JSG
DRAWING SCALE:	AS NOTED

SHEET TITLE:

PROPOSED ROOF PLAN

SHEET:

A-101

DO NOT SCALE DRAWING

COPYRIGHT©STEPHEN J. WESSLING ARCHITECTS INC. 2018

Drawing name: J:_SAFKIT\18034 14 beacon st\50-construction documents\architectural\Auto\CAD\14 beacon street exterior restoration\Sheets\18034 A-101 Existing Roof Plan.dwg
Apr 26, 2018 - 16:09pm
Xref: J:_Jobs\2018\18034 14 BEACON\70-Construction Documents\Architectural\Auto\CAD\14 Beacon Street Exterior Restoration\18034_Arch Title Block 2018.dwg
Xref: J:_Jobs\2018\18034 14 BEACON\70-Construction Documents\Architectural\Auto\CAD\14 Beacon Street Exterior Restoration\18034_Roof Plan.dwg
Xref: J:_Jobs\2018\18034 14 beacon st\50-construction documents\architectural\auto\cad\14 beacon street exterior restoration\Views\18034_Keynotes.dwg

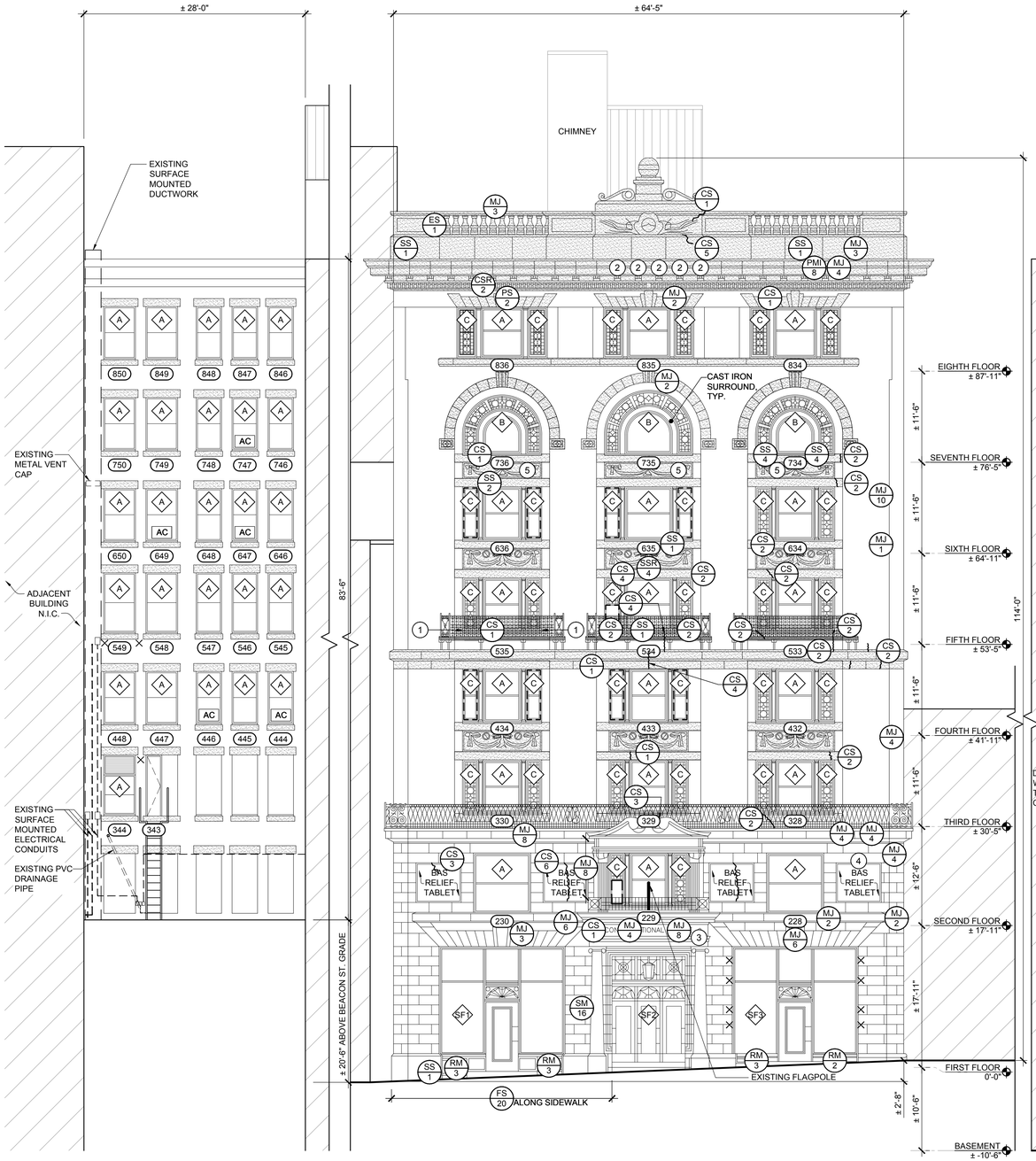

2A HIDDEN NORTH ELEVATION
1/8"=1'-0"

1 NORTH ELEVATION - BEACON STREET
1/8"=1'-0"

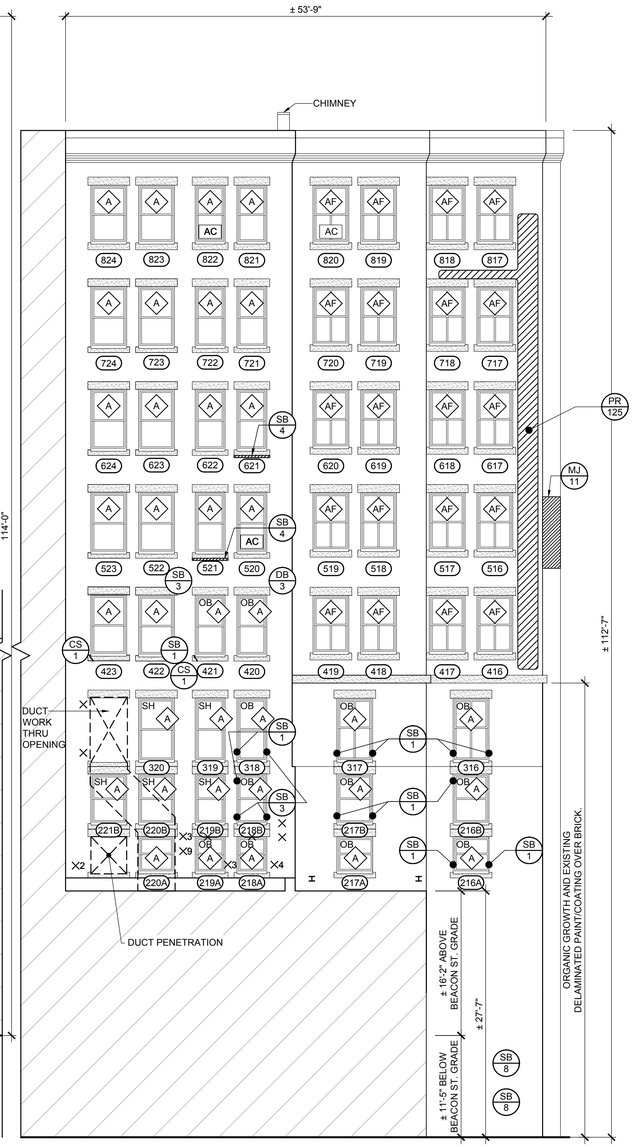

2B HIDDEN NORTH ELEVATION
1/8"=1'-0"

LEGEND

XXX	OPENING DESIGNATION (SEE SCHEDULE)
X	WINDOW DESIGNATION (TYPE)
X	KEYED NOTE
OB	OBSCURED GLASS
SH	SHUTTERS
AC	AIR CONDITIONING UNIT
	LEADED GLASS PREVIOUSLY REPLACED WITH CLEAR GLASS

GENERAL NOTES

1)	ROUNDED EDGES OF STONE ON BEACON STREET ELEVATION ARE WORN/ERODED.
2)	CARBON STAINING AT 90% OF SURFACE AREA OF BEACON STREET CORNICE/OVERHANG. SIGNS OF PREVIOUS CRACK REPAIRS EVIDENT.
3)	NO LEADED T JOINTS AT STONES ON HORIZONTAL LEDGE AT 3RD FLOOR CORNICE ON BEACON STREET ELEVATION.
4)	ROWLOCK BRICK UNITS AT ALL ELEVATIONS EXCEPT LIGHTWELLS ARE BLACK/BROWN GLAZED BRICK. 60% OF UNITS ON THESE ELEVATION ARE CRACKED.
5)	HEAVY CARBON AND RUST STAINING AT STONE HEADERS AND SILLS AT AND ADJACENT TO WEST ELEVATION FIRE ESCAPE.
6)	MAJORITY OF SHUTTER DOORS CANNOT COMPLETELY CLOSE. HEAVY RUST STAINING IS EVIDENT ON THE SKYWARD FACING DOOR SURFACES.
7)	FIRE ESCAPE GUARDRAIL EMBEDMENT LOCATIONS HAVE NO PERIMETER SEALANT AND MULTIPLE SPALLED BRICK AROUND THEM. 8 LOCATIONS AND 4 SPALLED BRICK UNITS EACH.
8)	EXISTING DELAMINATED PAINT/COATING IS PRESENT ALL THE LIGHTWELL ELEVATIONS.

KEYED NOTES

1	BALCONY EMBEDMENT OK. 65% OF BALCONY IS RUSTED AND AND HAS FLAKING PAINT. NEWER FASTENERS.
2	EDGES OF STONE ARE SPALLED. PREVIOUS MORTAR JOINT REPAIRS ARE EVIDENT.
3	STEP CRACK THROUGH STONE AT "U" IN THE WORD "HOUSE".
4	ANCHOR/PIN LOCATION COVERED WITH INFILL. SEPARATING MORTAR JOINTS (16 LF) ALL AROUND TABLET.
5	CARBON STAINING AT ALL ORNAMENTAL STONEWORK.
6	DETAILS AND SCROLL EDGES SPALLED. WIDESPREAD CARBON STAINING.
7	COPPER PREVIOUSLY PAINTED; JOINT BETWEEN COPPER AND STONE OPEN, FASTENERS/RIVETS POPPED/MISSING.
8	BROKEN SHUTTER PINTLE.
9	ARCH APEX STONE HAS HARD JOINT - NO SPACE.
10	WOOD AND CHICKEN WIRE AT GAP.
11	RUSTED METAL FAUX BALCONY.
12	DETERIORATED MORTAR JOINT (9 LF) AT STONE AROUND BALCONY.

CONDITION LEGEND

X	ABANDONED ANCHOR
SSR	SPALLED STONE REPAIR (# = SF)
CSR	CRACKED STONE REPAIR (# = LF)
PS	PREVIOUS STONE REPAIR (# = SF)
PMJ	PREVIOUS MORTAR JOINT REPAIR (# = SF)
MJ	CRACKED/DETERIORATED/MISSING MORTAR JOINT
SS	SPALLED STONE (# = SF)
CS	CRACKED STONE (# = LF)
RM	RUSTED METAL PANEL OR FLASHING (# = SF)
SB	SPALLED BRICK UNIT(S)
CB	CRACKED BRICK UNIT(S)
DB	DISPLACED BRICK UNIT(S)
SC	STEP CRACK THROUGH MASONRY (# = LF)
OJ	OPEN JOINT (# = LF)
ES	EFFLORESCENCE STAINING (# = SF)
CG	CRACKED GLASS (# = UNIT)
ʃ	STEP CRACK
H	BEAM PENETRATION
⊛	SHUTTER PINTLE

KEY PLAN

SCALE: N.T.S.

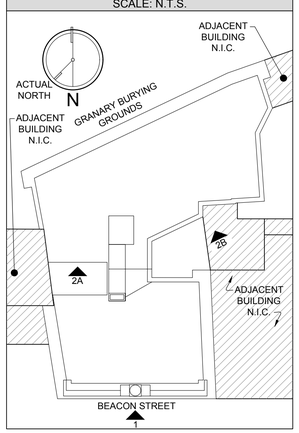

WESSLING ARCHITECTS
AIA-CSI-BOCA
PRESIDENTS PLACE, 1250 HANCOCK STREET, SUITE 815N
QUINCY, MA 02169 TEL. 617-773-8150 FAX 617-773-4902
www.wesslingarchitects.com

CONSULTANTS:

PROJECT:

HISTORIC FACADE RESTORATION

14 BEACON STREET
BOSTON, MA 02108

CLIENT:

FAROS PROPERTIES

20 ASHBURTON PLACE, 2ND FLOOR
BOSTON, MA 02108

NOT FOR CONSTRUCTION

PROFESSIONAL

PREPARED BY A LICENSED ARCHITECT
Any changes to this item can be a violation of the law unless altered by a licensed architect. Any alteration made to this item must be accompanied by a specific description of change or changes made; date change was made, as well as the seal of the licensed architect who made or oversaw the changes.

MARK	DATE	DESCRIPTION
	04-25-18	HISTORIC REVIEW SUBMISSION

ISSUE:

PROJECT NO.:	18034
DRAWN BY:	LAW / PON
CHECKED BY:	JSG
DRAWING SCALE:	AS NOTED

SHEET TITLE:

EXISTING NORTH ELEVATIONS

SHEET:

A-201

DO NOT SCALE DRAWING

COPYRIGHT©STEPHEN J. WESSLING ARCHITECTS INC. 2018

Drawing name: L:_SAVED\18\18034 14 beacon st\50-construction documents\architecture\Autocad\24-14 beacon street exterior restoration\Sheets\18034_A-201 Existing North Elevations.dwg
Apr 26, 2018 - 16:09pm
Xref: L:_SAVED\18\18034 14 BEACON\70-Construction Documents\Architecture\Autocad\24-14 Beacon Street Exterior Restoration\18034_24-28 Title Block 2018.dwg
Xref: L:_SAVED\18\18034 14 beacon st\50-construction documents\architecture\autocad\24-14 beacon street exterior restoration\Xrefs\18034_Base Plan.dwg
Xref: L:_SAVED\18\18034 14 beacon st\50-construction documents\architecture\autocad\24-14 beacon street exterior restoration\Xrefs\18034_Locus Plan.dwg
Xref: L:_SAVED\18\18034 14 beacon st\50-construction documents\architecture\autocad\24-14 beacon street exterior restoration\Xrefs\18034_Cyclorama.dwg

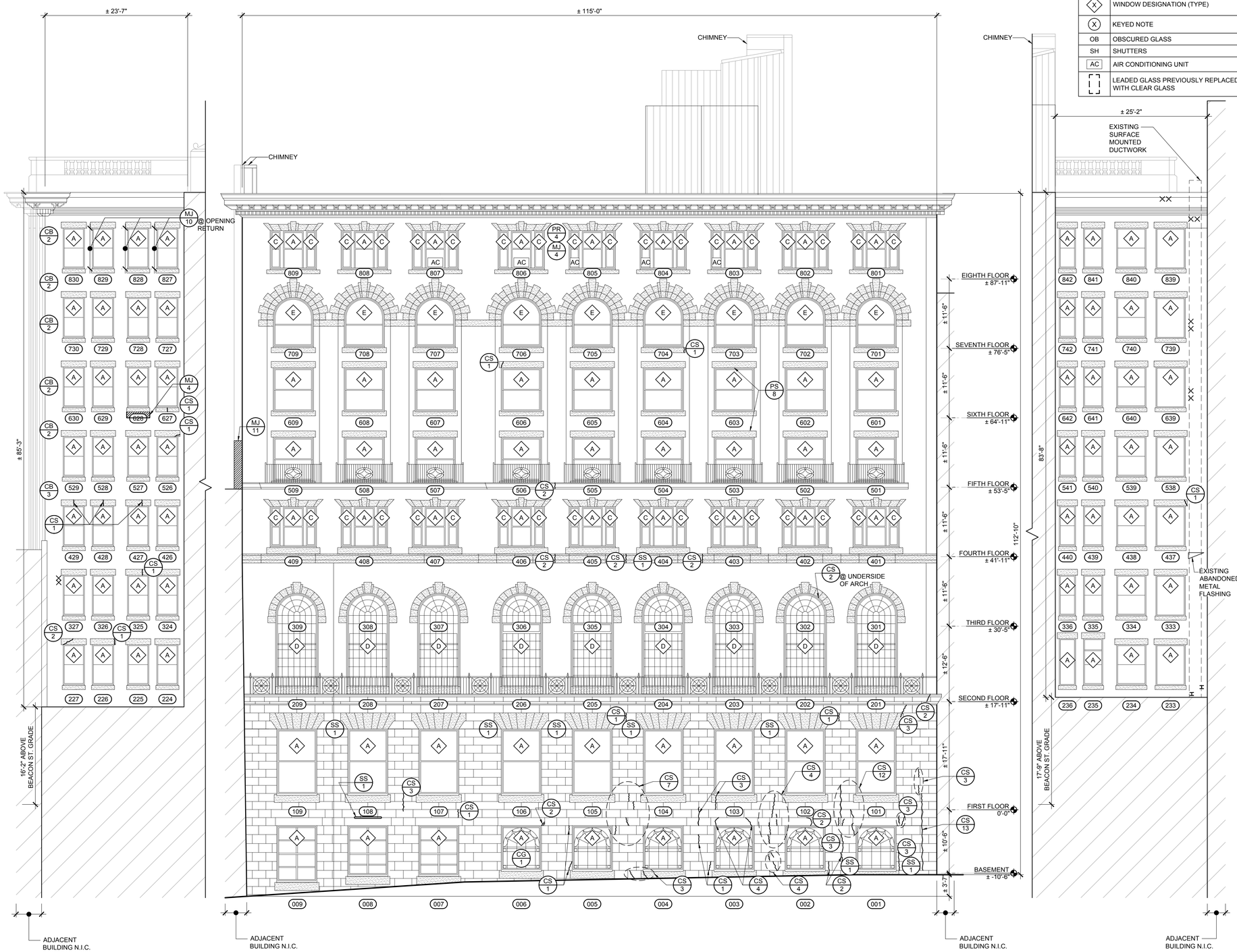

2B HIDDEN SOUTH ELEVATION
1/8"=1'-0"

1 SOUTH ELEVATION
1/8"=1'-0"

2A HIDDEN SOUTH ELEVATION
1/8"=1'-0"

LEGEND

XXX	OPENING DESIGNATION (SEE SCHEDULE)
X	WINDOW DESIGNATION (TYPE)
X	KEYED NOTE
OB	OBSCURED GLASS
SH	SHUTTERS
AC	AIR CONDITIONING UNIT
	LEADED GLASS PREVIOUSLY REPLACED WITH CLEAR GLASS

GENERAL NOTES

1)	ROUNDED EDGES OF STONE ON BEACON STREET ELEVATION ARE WORN/ERODED.
2)	CARBON STAINING AT 90% OF SURFACE AREA OF BEACON STREET CORNICE/OVERHANG. SIGNS OF PREVIOUS CRACK REPAIRS EVIDENT.
3)	NO LEADED T JOINTS AT STONES ON HORIZONTAL LEDGE AT 3RD FLOOR CORNICE ON BEACON STREET ELEVATION.
4)	ROWLOCK BRICK UNITS AT ALL ELEVATIONS EXCEPT LIGHTWELLS ARE BLACK/BROWN GLAZED BRICK. 60% OF UNITS ON THESE ELEVATION ARE CRACKED.
5)	HEAVY CARBON AND RUST STAINING AT STONE HEADERS AND SILLS AT AND ADJACENT TO WEST ELEVATION FIRE ESCAPE.
6)	MAJORITY OF SHUTTER DOORS CANNOT COMPLETELY CLOSE. HEAVY RUST STAINING IS EVIDENT ON THE SKYWARD FACING DOOR SURFACES.
7)	FIRE ESCAPE GUARDRAIL EMBEDMENT LOCATIONS HAVE NO PERIMETER SEALANT AND MULTIPLE SPALLED BRICK AROUND THEM. 8 LOCATIONS AND 4 SPALLED BRICK UNITS EACH.
8)	EXISTING DELAMINATED PAINT/COATING IS PRESENT ALL THE LIGHTWELL ELEVATIONS.

KEYED NOTES

1	BALCONY EMBEDMENT OK. 65% OF BALCONY IS RUSTED AND AND HAS FLAKING PAINT. NEWER FASTENERS.
2	EDGES OF STONE ARE SPALLED. PREVIOUS MORTAR JOINT REPAIRS ARE EVIDENT.
3	STEP CRACK THROUGH STONE AT "U" IN THE WORD "HOUSE".
4	ANCHOR/PIN LOCATION COVERED WITH INFILL. SEPARATING MORTAR JOINTS (16 LF) ALL AROUND TABLET.
5	CARBON STAINING AT ALL ORNAMENTAL STONEWORK.
6	DETAILS AND SCROLL EDGES SPALLED. WIDESPREAD CARBON STAINING.
7	COPPER PREVIOUSLY PAINTED; JOINT BETWEEN COPPER AND STONE OPEN, FASTENERS/RIVETS POPPED/MISSING.
8	BROKEN SHUTTER PINTLE.
9	ARCH APEX STONE HAS HARD JOINT - NO SPACE.
10	WOOD AND CHICKEN WIRE AT GAP.
11	RUSTED METAL FAUX BALCONY.
12	DETERIORATED MORTAR JOINT (9 LF) AT STONE AROUND BALCONY.

CONDITION LEGEND

X	ABANDONED ANCHOR
SSR	SPALLED STONE REPAIR (# = SF)
CSR	CRACKED STONE REPAIR (# = LF)
PS	PREVIOUS STONE REPAIR (# = SF)
PMJ	PREVIOUS MORTAR JOINT REPAIR (# = SF)
MJ	CRACKED/DETERIORATED/MISSING MORTAR JOINT
SS	SPALLED STONE (# = SF)
CS	CRACKED STONE (# = LF)
RM	RUSTED METAL PANEL OR FLASHING (# = SF)
SB	SPALLED BRICK UNIT(S)
CB	CRACKED BRICK UNIT(S)
DB	DISPLACED BRICK UNIT(S)
SC	STEP CRACK THROUGH MASONRY (# = LF)
OJ	OPEN JOINT (# = LF)
ES	EFFLORESCENCE STAINING (# = SF)
CG	CRACKED GLASS (# = UNIT)
	STEP CRACK
H	BEAM PENETRATION
	SHUTTER PINTLE

KEY PLAN

SCALE: N.T.S.

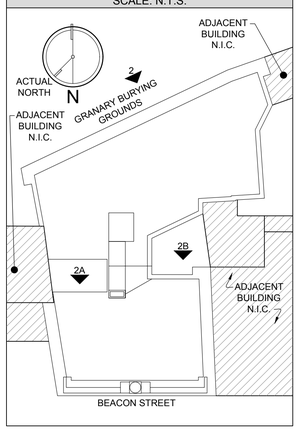

WESSLING ARCHITECTS
AIA-CSI-BOCA
PRESIDENTS PLACE, 1250 HANCOCK STREET, SUITE 815N
QUINCY, MA 02169 TEL. 617-773-8150 FAX 617-773-4902
www.wesslingarchitects.com

CONSULTANTS:

PROJECT:

HISTORIC FACADE RESTORATION

14 BEACON STREET
BOSTON, MA 02108

CLIENT:

FAROS PROPERTIES

20 ASHBURTON PLACE, 2ND FLOOR
BOSTON, MA 02108

NOT FOR CONSTRUCTION

PROFESSIONAL

PREPARED BY A LICENSED ARCHITECT
Any changes to this item can be a violation of the law unless altered by a licensed architect. Any alteration made to this item must be accompanied by a specific description of change or changes made; date change was made, as well as the seal of the licensed architect who made or oversaw the changes.

MARK	DATE	DESCRIPTION
	04-25-18	HISTORIC REVIEW SUBMISSION

ISSUE:

PROJECT NO.:	18034
DRAWN BY:	LAW / PON
CHECKED BY:	JSG
DRAWING SCALE:	AS NOTED

SHEET TITLE:

EXISTING SOUTH ELEVATIONS

SHEET:

A-202

DO NOT SCALE DRAWING

COPYRIGHT©STEPHEN J. WESSLING ARCHITECTS INC. 2018

Drawing name: J:_Jobs\18034 14 beacon st\05-construction documents\architecture\Arch\CAD\14 beacon street exterior restoration\Sheets\18034 A-202 Existing South Elevations.dwg
Apr 25, 2018 - 16:50pm
Xref:J:_Jobs\18034 14 BEACON ST\05-Construction Documents\Architecture\Arch\14 Beacon Street Exterior Restoration\18034_Arch Site Plan Block 2018.dwg
Xref:J:_Jobs\18034 14 BEACON ST\05-Construction Documents\Architecture\Arch\14 Beacon Street Exterior Restoration\Xrefs\18034_Xref_Locus Plan.dwg
Xref:J:_Jobs\18034 14 beacon st\05-construction documents\architecture\cad\cad\14 beacon street exterior restoration\Xrefs\18034_Locus Plan.dwg
Xref:J:_Jobs\18034 14 beacon st\05-construction documents\architecture\cad\cad\14 beacon street exterior restoration\Xrefs\18034_Elevations.dwg

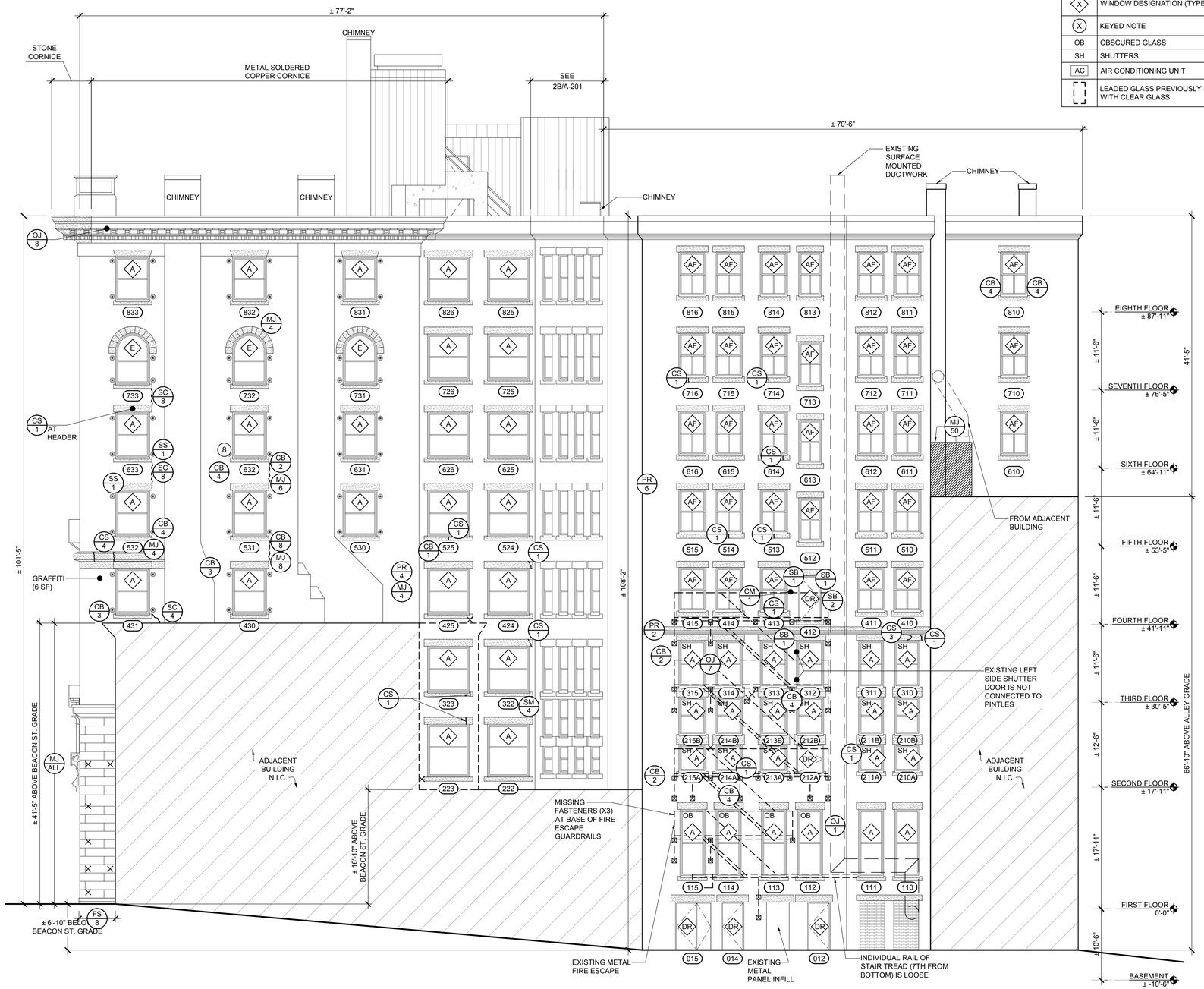

1 WEST ELEVATION
1/8"=1'-0"

LEGEND

XXX	OPENING DESIGNATION (SEE SCHEDULE)
X	WINDOW DESIGNATION (TYPE)
X	KEYED NOTE
OB	OBSCURED GLASS
SH	SHUTTERS
AC	AIR CONDITIONING UNIT
	LEADED GLASS PREVIOUSLY REPLACED WITH CLEAR GLASS

GENERAL NOTES

1)	ROUNDED EDGES OF STONE ON BEACON STREET ELEVATION ARE WORN/ERODED.
2)	CARBON STAINING AT 90% OF SURFACE AREA OF BEACON STREET CORNICE/OVERHANG. SIGNS OF PREVIOUS CRACK REPAIRS EVIDENT.
3)	NO LEADED T JOINTS AT STONES ON HORIZONTAL LEDGE AT 3RD FLOOR CORNICE ON BEACON STREET ELEVATION.
4)	ROWLOCK BRICK UNITS AT ALL ELEVATIONS EXCEPT LIGHTWELLS ARE BLACK/BROWN GLAZED BRICK. 60% OF UNITS ON THESE ELEVATION ARE CRACKED.
5)	HEAVY CARBON AND RUST STAINING AT STONE HEADERS AND SILLS AT AND ADJACENT TO WEST ELEVATION FIRE ESCAPE.
6)	MAJORITY OF SHUTTER DOORS CANNOT COMPLETELY CLOSE. HEAVY RUST STAINING IS EVIDENT ON THE SKYWARD FACING DOOR SURFACES.
7)	FIRE ESCAPE GUARDRAIL EMBEDMENT LOCATIONS HAVE NO PERIMETER SEALANT AND MULTIPLE SPALLED BRICK AROUND THEM. 8 LOCATIONS AND 4 SPALLED BRICK UNITS EACH.
8)	EXISTING DELAMINATED PAINT/COATING IS PRESENT ALL THE LIGHTWELL ELEVATIONS.

KEYED NOTES

1	BALCONY EMBEDMENT OK. 65% OF BALCONY IS RUSTED AND AND HAS FLAKING PAINT. NEWER FASTENERS.
2	EDGES OF STONE ARE SPALLED. PREVIOUS MORTAR JOINT REPAIRS ARE EVIDENT.
3	STEP CRACK THROUGH STONE AT "U" IN THE WORD "HOUSE".
4	ANCHOR/PIN LOCATION COVERED WITH INFILL. SEPARATING MORTAR JOINTS (16 LF) ALL AROUND TABLET.
5	CARBON STAINING AT ALL ORNAMENTAL STONEWORK.
6	DETAILS AND SCROLL EDGES SPALLED. WIDESPREAD CARBON STAINING.
7	COPPER PREVIOUSLY PAINTED; JOINT BETWEEN COPPER AND STONE OPEN, FASTENERS/RIVETS POPPED/MISSING.
8	BROKEN SHUTTER PINTLE.
9	ARCH APEX STONE HAS HARD JOINT - NO SPACE.
10	WOOD AND CHICKEN WIRE AT GAP.
11	RUSTED METAL FAUX BALCONY.
12	DETERIORATED MORTAR JOINT (9 LF) AT STONE AROUND BALCONY.

CONDITION LEGEND

X	ABANDONED ANCHOR
SSR	SPALLED STONE REPAIR (# = SF)
CSR	CRACKED STONE REPAIR (# = LF)
PS	PREVIOUS STONE REPAIR (# = SF)
PMJ	PREVIOUS MORTAR JOINT REPAIR (# = SF)
MJ	CRACKED/DETERIORATED/MISSING MORTAR JOINT
SS	SPALLED STONE (# = SF)
CS	CRACKED STONE (# = LF)
RM	RUSTED METAL PANEL OR FLASHING (# = SF)
SB	SPALLED BRICK UNIT(S)
CB	CRACKED BRICK UNIT(S)
DB	DISPLACED BRICK UNIT(S)
SC	STEP CRACK THROUGH MASONRY (# = LF)
OJ	OPEN JOINT (# = LF)
ES	EFFLORESCENCE STAINING (# = SF)
CG	CRACKED GLASS (# = UNIT)
	STEP CRACK
H	BEAM PENETRATION
	SHUTTER PINTLE

KEY PLAN

SCALE: N.T.S.

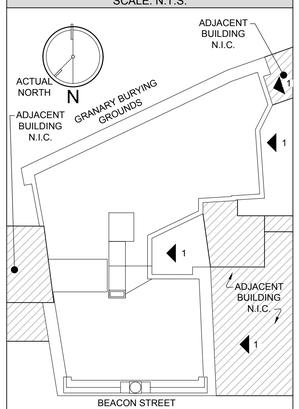

WESSLING ARCHITECTS
AIA-CSI-BOCA
PRESIDENTS PLACE, 1250 HANCOCK STREET, SUITE 815N
QUINCY, MA 02169 TEL. 617-773-8150 FAX 617-773-4902
www.wesslingarchitects.com

CONSULTANTS:

PROJECT:

HISTORIC FACADE RESTORATION

14 BEACON STREET
BOSTON, MA 02108

CLIENT:

FAROS PROPERTIES

20 ASHBURTON PLACE, 2ND FLOOR
BOSTON, MA 02108

NOT FOR CONSTRUCTION

PROFESSIONAL

PREPARED BY A LICENSED ARCHITECT
Any changes to this item can be a violation of the law unless altered by a licensed architect. Any alteration made to this item must be accompanied by a specific description of change or changes made; date change was made, as well as the seal of the licensed architect who made or oversaw the changes.

MARK	DATE	DESCRIPTION
	04-25-18	HISTORIC REVIEW SUBMISSION

ISSUE:

PROJECT NO.:	18034
DRAWN BY:	LAW / PON
CHECKED BY:	JSG
DRAWING SCALE:	AS NOTED

SHEET TITLE:

EXISTING WEST ELEVATION

SHEET:

A-203

DO NOT SCALE DRAWING

COPYRIGHT©STEPHEN J. WESSLING ARCHITECTS INC. 2018

Drawing name: J:_Jobs\2018\18034 14 beacon st\05-construction documents\architecture\Arch\CAD\14 beacon street exterior restoration\Sheets\18034 A-203 Existing West Elevation.dwg
Apr 25, 2018 - 16:50pm
Xref:J:_Jobs\2018\18034 14 BEACON ST\04-Construction Documents\Architecture\Arch\CAD\14 Beacon Street Exterior Restoration\05-Sheets\18034_24x36 Tile Block 2018.dwg
Xref:J:_Jobs\2018\18034 14 beacon st\05-construction documents\architecture\structural\cad\14 beacon street exterior restoration\sheets\18034_S-Notes.dwg
Xref:J:_Jobs\2018\18034 14 beacon st\05-construction documents\architecture\structural\cad\14 beacon street exterior restoration\sheets\18034_S-Keynotes.dwg
Xref:J:_Jobs\2018\18034 14 beacon st\05-construction documents\architecture\structural\cad\14 beacon street exterior restoration\sheets\18034_S-Details.dwg

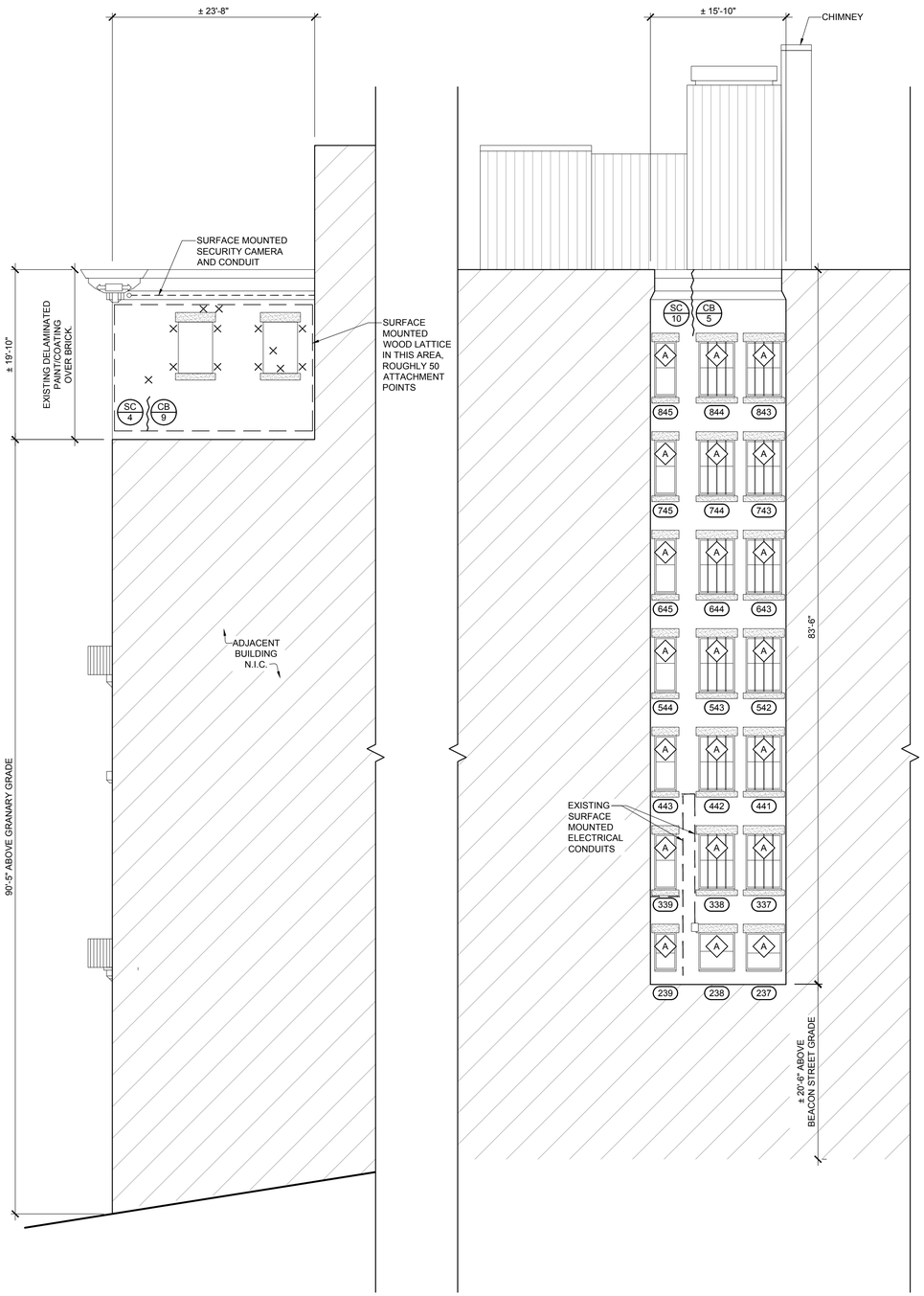

1B EAST ELEVATION
1/8"=1'-0"

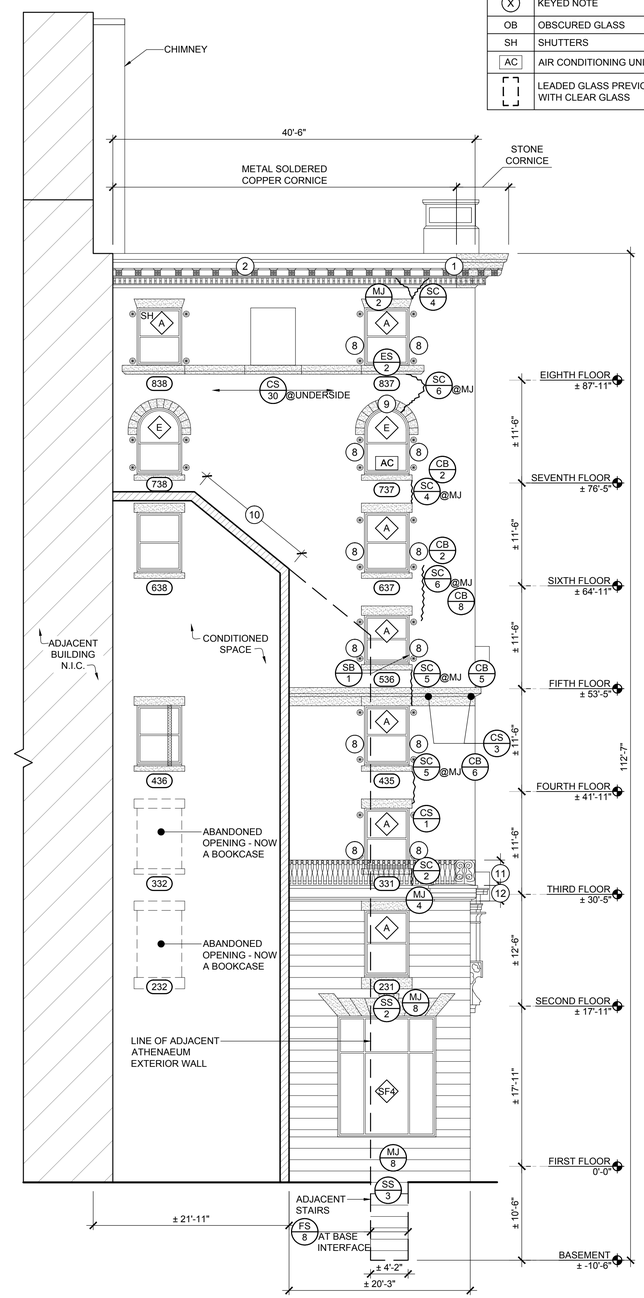

1A EAST ELEVATION
1/8"=1'-0"

LEGEND

XXX	OPENING DESIGNATION (SEE SCHEDULE)
X	WINDOW DESIGNATION (TYPE)
X	KEYED NOTE
OB	OBSCURED GLASS
SH	SHUTTERS
AC	AIR CONDITIONING UNIT
	LEADED GLASS PREVIOUSLY REPLACED WITH CLEAR GLASS

GENERAL NOTES

1)	ROUNDED EDGES OF STONE ON BEACON STREET ELEVATION ARE WORN/ERODED.
2)	CARBON STAINING AT 90% OF SURFACE AREA OF BEACON STREET CORNICE/OVERHANG. SIGNS OF PREVIOUS CRACK REPAIRS EVIDENT.
3)	NO LEADED T JOINTS AT STONES ON HORIZONTAL LEDGE AT 3RD FLOOR CORNICE ON BEACON STREET ELEVATION.
4)	ROWLOCK BRICK UNITS AT ALL ELEVATIONS EXCEPT LIGHTWELLS ARE BLACK/BROWN GLAZED BRICK. 60% OF UNITS ON THESE ELEVATION ARE CRACKED.
5)	HEAVY CARBON AND RUST STAINING AT STONE HEADERS AND SILLS AT AND ADJACENT TO WEST ELEVATION FIRE ESCAPE.
6)	MAJORITY OF SHUTTER DOORS CANNOT COMPLETELY CLOSE. HEAVY RUST STAINING IS EVIDENT ON THE SKYWARD FACING DOOR SURFACES.
7)	FIRE ESCAPE GUARDRAIL EMBEDMENT LOCATIONS HAVE NO PERIMETER SEALANT AND MULTIPLE SPALLED BRICK AROUND THEM. 8 LOCATIONS AND 4 SPALLED BRICK UNITS EACH.
8)	EXISTING DELAMINATED PAINT/COATING IS PRESENT ALL THE LIGHTWELL ELEVATIONS.

KEYED NOTES

1	BALCONY EMBEDMENT OK. 65% OF BALCONY IS RUSTED AND AND HAS FLAKING PAINT. NEWER FASTENERS.
2	EDGES OF STONE ARE SPALLED. PREVIOUS MORTAR JOINT REPAIRS ARE EVIDENT.
3	STEP CRACK THROUGH STONE AT "U" IN THE WORD "HOUSE".
4	ANCHOR/PIN LOCATION COVERED WITH INFILL. SEPARATING MORTAR JOINTS (16 LF) ALL AROUND TABLET.
5	CARBON STAINING AT ALL ORNAMENTAL STONEWORK.
6	DETAILS AND SCROLL EDGES SPALLED. WIDESPREAD CARBON STAINING.
7	COPPER PREVIOUSLY PAINTED; JOINT BETWEEN COPPER AND STONE OPEN, FASTENERS/RIVETS POPPED/MISSING.
8	BROKEN SHUTTER PINTLE.
9	ARCH APEX STONE HAS HARD JOINT - NO SPACE.
10	WOOD AND CHICKEN WIRE AT GAP.
11	RUSTED METAL FAUX BALCONY.
12	DETERIORATED MORTAR JOINT (9 LF) AT STONE AROUND BALCONY.

CONDITION LEGEND

X	ABANDONED ANCHOR
SSR	SPALLED STONE REPAIR (# = SF)
CSR	CRACKED STONE REPAIR (# = LF)
PS	PREVIOUS STONE REPAIR (# = SF)
PMJ	PREVIOUS MORTAR JOINT REPAIR (# = SF)
MJ	CRACKED/DETERIORATED/MISSING MORTAR JOINT
SS	SPALLED STONE (# = SF)
CS	CRACKED STONE (# = LF)
RM	RUSTED METAL PANEL OR FLASHING (# = SF)
SB	SPALLED BRICK UNIT(S)
CB	CRACKED BRICK UNIT(S)
DB	DISPLACED BRICK UNIT(S)
SC	STEP CRACK THROUGH MASONRY (# = LF)
OJ	OPEN JOINT (# = LF)
ES	EFFLORESCENCE STAINING (# = SF)
CG	CRACKED GLASS (# = UNIT)
	STEP CRACK
	BEAM PENETRATION
	SHUTTER PINTLE

KEY PLAN

SCALE: N.T.S.

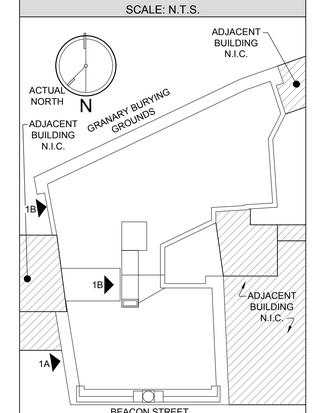

WESSLING ARCHITECTS
AIA-CSI-BOCA
PRESIDENTS PLACE, 1250 HANCOCK STREET, SUITE 815N
QUINCY, MA 02169 TEL. 617-773-8150 FAX 617-773-4902
www.wesslingarchitects.com

CONSULTANTS:

PROJECT:

HISTORIC FACADE RESTORATION

14 BEACON STREET
BOSTON, MA 02108

CLIENT:

FAROS PROPERTIES

20 ASHBURTON PLACE, 2ND FLOOR
BOSTON, MA 02108

NOT FOR CONSTRUCTION

PROFESSIONAL

PREPARED BY A LICENSED ARCHITECT
Any changes to this item can be a violation of the law unless altered by a licensed architect. Any alteration made to this item must be accompanied by a specific description of change or changes made; date change was made, as well as the seal of the licensed architect who made or oversaw the changes.

MARK	DATE	DESCRIPTION
	04-25-18	HISTORIC REVIEW SUBMISSION

ISSUE:

PROJECT NO.:	18034
DRAWN BY:	LAW / PON
CHECKED BY:	JSG
DRAWING SCALE:	AS NOTED

SHEET TITLE:

EXISTING EAST ELEVATIONS

SHEET:

A-204

DO NOT SCALE DRAWING

COPYRIGHT©STEPHEN J. WESSLING ARCHITECTS INC. 2018

Drawing name: J:_SJW2018\18034 14 beacon st\0-construction documents\architecture\AutoCAD\14 beacon street exterior restoration\Sheets\18034 A-204 Existing East Elevations.dwg
Apr 26, 2018 - 16:09pm
Xref: J:_SJW2018\18034 14 BEACON ST\0-Construction Documents\Architecture\AutoCAD\14 Beacon Street Exterior Restoration\18034_Legend_Title Block 2018.dwg
Xref: J:_SJW2018\18034 14 beacon st\0-construction documents\architecture\autocad\14 beacon street exterior restoration\Xrefs\18034_Plan_24x36 Title Block 2018.dwg
Xref: J:_SJW2018\18034 14 beacon st\0-construction documents\architecture\autocad\14 beacon street exterior restoration\Xrefs\18034_Elevations.dwg
Xref: J:_SJW2018\18034 14 beacon st\0-construction documents\architecture\autocad\14 beacon street exterior restoration\Xrefs\18034_Elevations.dwg

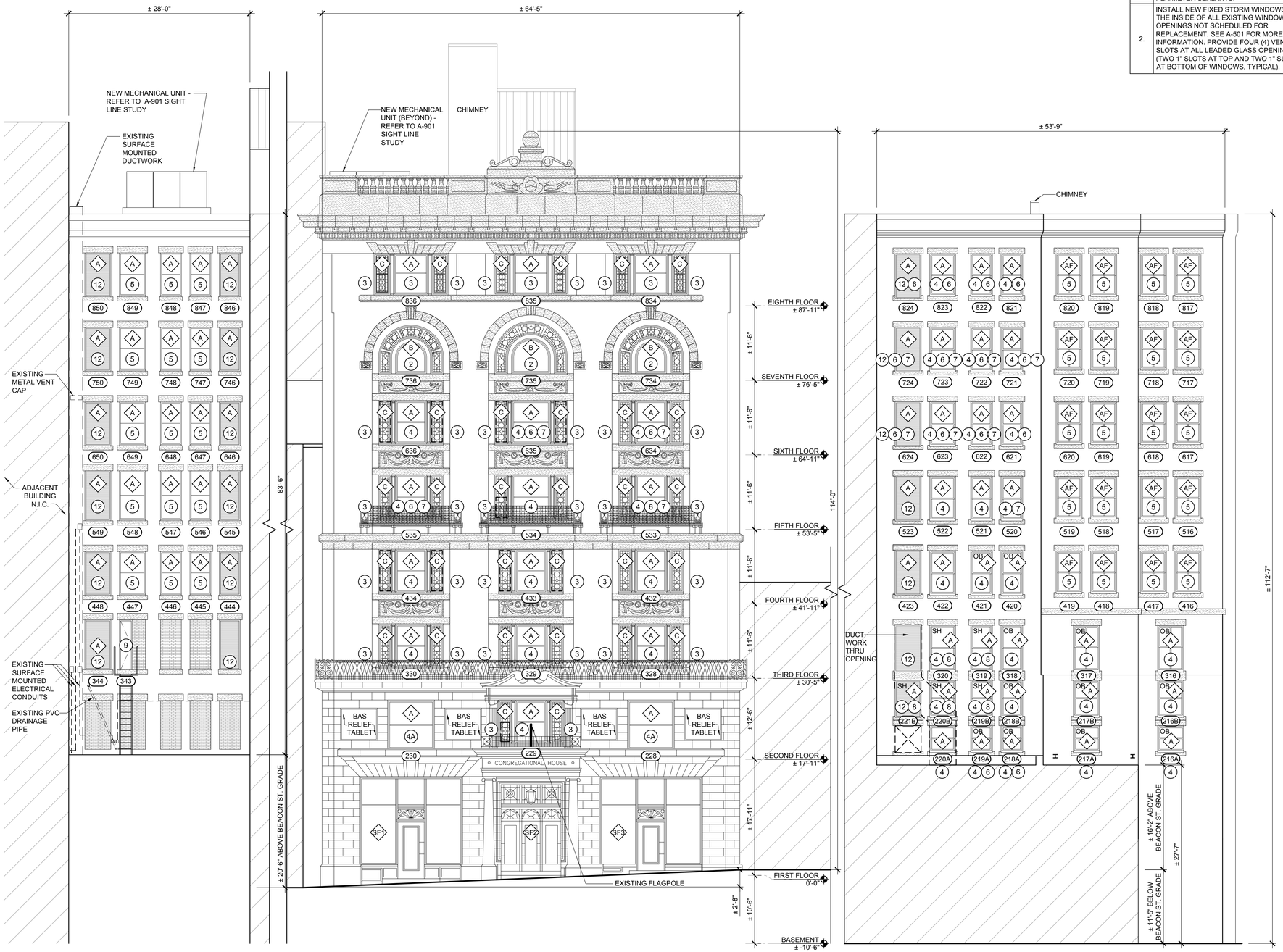

2A HIDDEN NORTH ELEVATION
1/8"=1'-0"

1 NORTH ELEVATION - BEACON STREET
1/8"=1'-0"

2B HIDDEN NORTH ELEVATION
1/8"=1'-0"

GENERAL WORK NOTES

1.	REMOVE AND REPLACE ALL WINDOW PERIMETER SEALANTS.
2.	INSTALL NEW FIXED STORM WINDOWS AT THE INSIDE OF ALL EXISTING WINDOW OPENINGS NOT SCHEDULED FOR REPLACEMENT. SEE A-501 FOR MORE INFORMATION. PROVIDE FOUR (4) VENT SLOTS AT ALL LEADED GLASS OPENINGS (TWO 1" SLOTS AT TOP AND TWO 1" SLOTS AT BOTTOM OF WINDOWS, TYPICAL).

PROPOSED WORK NOTES

NOTE: REFER TO WINDOW SCHEDULE FOR SPECIFIC WORK ITEMS FOR EACH OPENING.

1	REFINISH - REGLAZE AND REPAINT.
2	RESTORE EXISTING SASH, FRAME, AND HARDWARE.
3	REPLICATE ONE OR BOTH SASH DETERIORATED BEYOND BEING RESTORED.
4	REPLACE EXISTING WINDOW SASH WITH NEW WOOD SASH - MARVIN MAGNUM SINGLE HUNG TILT PAC - REFER TO SHEET A-502.
4A	REPLACE EXISTING WINDOW WITH NEW WOOD WINDOW AND FRAME - JB PROPER BOSTONIAN - REFER TO SHEET A-503.
5	REPLACE EXISITNG WINDOW AND FRAME WITH NEW ALUMINUM WINDOW - REFER TO SHEET A-505.
6	REPLACE WOOD SILL TO MATCH EXISTING.
7	REPLACE WOOD BRICK MOULD OR TRIM TO MATCH EXISTING.
8	MAINTAIN EXISTING SHUTTERS OR REPLACE IN KIND.
9	REPLACE DOOR.
10	REPLACE INTERIOR TRIM.
11	REMOVE EXISTING WINDOW AND INSTALL NEW BRICK MASONRY INFILL - SET BACK 4" FROM FACE OF WALL.
12	REMOVE EXISTING WINDOW AND INSTALL NEW MECHANICAL LOUVER IN OPENING.

ELEVATIONS LEGEND

	BRICK MASONRY UNITS
	STONE
	STONE MORTAR JOINTS
	PARTITION WALL OBSTRUCTION
	NEW MECHANICAL LOUVER IN EXISTING WINDOW OPENING
	EXISTING BRICK INFILL
	NEW BRICK INFILL IN EXISTING WINDOW OPENING
	EXISTING CAST IRON DECORATIVE BALCONY
	REPLICATE LEADED GLASS SASHES TO MATCH EXISTING STYLE AND LAYOUT

KEY PLAN

SCALE: N.T.S.

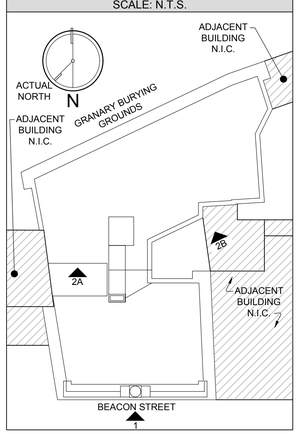

WESSLING ARCHITECTS
AIA-CSI-BOCA
PRESIDENTS PLACE, 1250 HANCOCK STREET, SUITE 815N
QUINCY, MA 02169 TEL. 617-773-8150 FAX 617-773-4902
www.wesslingarchitects.com

CONSULTANTS:

PROJECT:

HISTORIC FACADE RESTORATION

14 BEACON STREET
BOSTON, MA 02108

CLIENT:

FAROS PROPERTIES

20 ASHBURTON PLACE, 2ND FLOOR
BOSTON, MA 02108

NOT FOR CONSTRUCTION

PROFESSIONAL

PREPARED BY A LICENSED ARCHITECT
Any changes to this item can be a violation of the law unless altered by a licensed architect. Any alteration made to this item must be accompanied by a specific description of change or changes made; date change was made, as well as the seal of the licensed architect who made or oversaw the changes.

MARK	DATE	DESCRIPTION
	04-25-18	HISTORIC REVIEW SUBMISSION

ISSUE:

PROJECT NO.:	18034
DRAWN BY:	LAW / PON
CHECKED BY:	JSG
DRAWING SCALE:	AS NOTED

SHEET TITLE:

PROPOSED NORTH ELEVATIONS

SHEET:

A-205

DO NOT SCALE DRAWING

COPYRIGHT©STEPHEN J. WESSLING ARCHITECTS INC. 2018

Drawing name: J:_SJW2018\18034 14 beacon st\50-construction documents\architecture\AutoCAD\14 beacon street exterior restoration\Sheets\18034 A-205 Proposed North Elevations.dwg
Apr 25, 2018 - 10:51pm
Xref: J:_SJW2018\18034 14 beacon st\50-Construction Documents\Structural\AutoCAD\14 Beacon Street Exterior Restoration\18034_Facade Tie Backs 20180.dwg
Xref: J:_SJW2018\18034 14 beacon st\50-construction documents\architecture\autocad\14 beacon street exterior restoration\Xrefs\18034_Base Plan.dwg
Xref: J:_SJW2018\18034 14 beacon st\50-construction documents\architecture\autocad\14 beacon street exterior restoration\Xrefs\18034_Locus Plan.dwg
Xref: J:_SJW2018\18034 14 beacon st\50-construction documents\architecture\autocad\14 beacon street exterior restoration\Xrefs\18034_Elevations.dwg

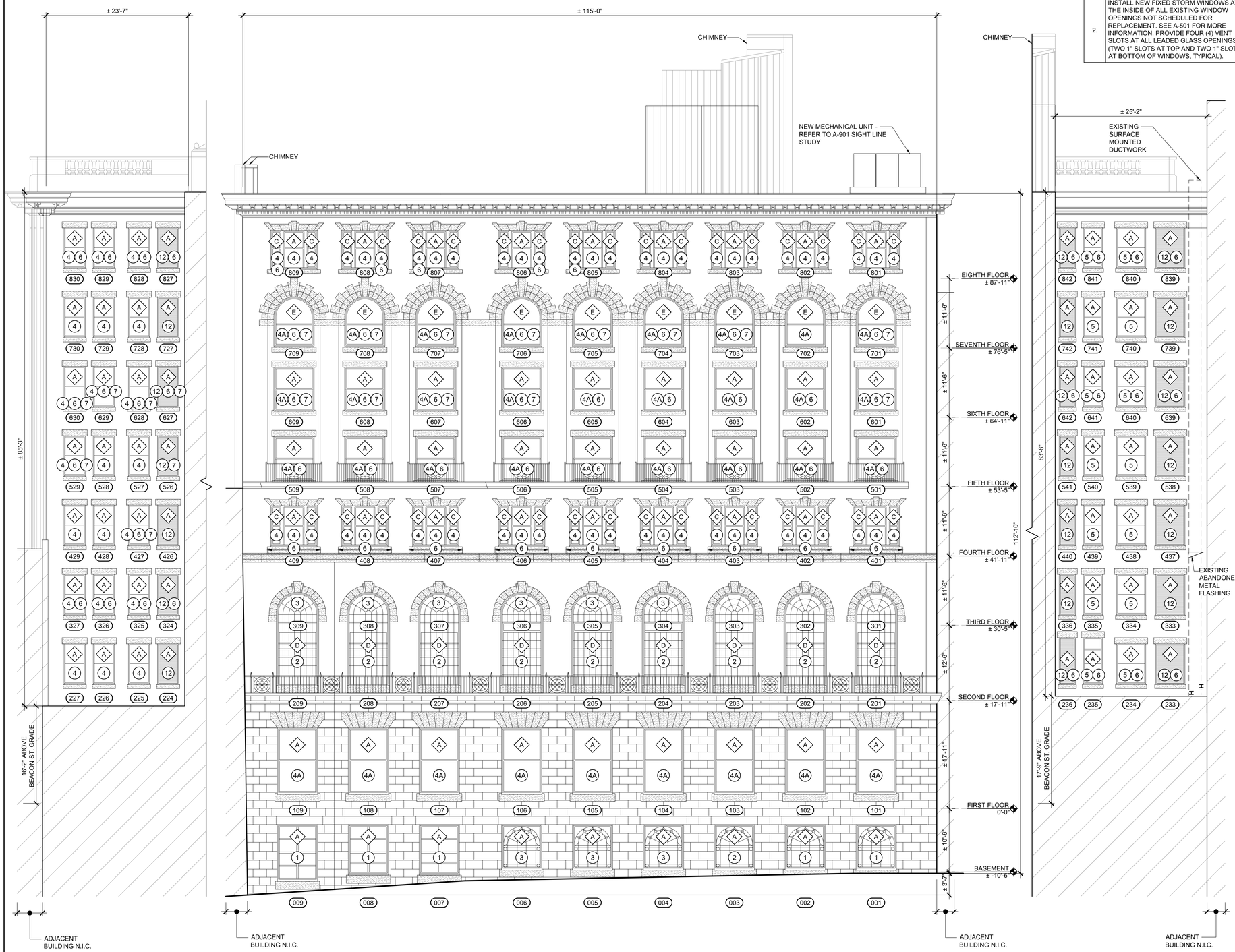

2B HIDDEN SOUTH ELEVATION
1/8"=1'-0"

1 SOUTH ELEVATION
1/8"=1'-0"

2A HIDDEN SOUTH ELEVATION
1/8"=1'-0"

GENERAL WORK NOTES

1.	REMOVE AND REPLACE ALL WINDOW PERIMETER SEALANTS.
2.	INSTALL NEW FIXED STORM WINDOWS AT THE INSIDE OF ALL EXISTING WINDOW OPENINGS NOT SCHEDULED FOR REPLACEMENT. SEE A-501 FOR MORE INFORMATION. PROVIDE FOUR (4) VENT SLOTS AT ALL LEADED GLASS OPENINGS (TWO 1" SLOTS AT TOP AND TWO 1" SLOTS AT BOTTOM OF WINDOWS, TYPICAL).

PROPOSED WORK NOTES

NOTE: REFER TO WINDOW SCHEDULE FOR SPECIFIC WORK ITEMS FOR EACH OPENING.

1	REFINISH - REGLAZE AND REPAINT.
2	RESTORE EXISTING SASH, FRAME, AND HARDWARE.
3	REPLICATE ONE OR BOTH SASH DETERIORATED BEYOND BEING RESTORED.
4	REPLACE EXISTING WINDOW SASH WITH NEW WOOD SASH - MARVIN MAGNUM SINGLE HUNG TILT PAC - REFER TO SHEET A-502.
4A	REPLACE EXISTING WINDOW WITH NEW WOOD WINDOW AND FRAME - JB PROPER BOSTONIAN - REFER TO SHEET A-503.
5	REPLACE EXISITNG WINDOW AND FRAME WITH NEW ALUMINUM WINDOW - REFER TO SHEET A-505.
6	REPLACE WOOD SILL TO MATCH EXISTING.
7	REPLACE WOOD BRICK MOULD OR TRIM TO MATCH EXISTING.
8	MAINTAIN EXISTING SHUTTERS OR REPLACE IN KIND.
9	REPLACE DOOR.
10	REPLACE INTERIOR TRIM.
11	REMOVE EXISTING WINDOW AND INSTALL NEW BRICK MASONRY INFILL - SET BACK 4" FROM FACE OF WALL.
12	REMOVE EXISTING WINDOW AND INSTALL NEW MECHANICAL LOUVER IN OPENING.

ELEVATIONS LEGEND

	BRICK MASONRY UNITS
	STONE
	STONE MORTAR JOINTS
	PARTITION WALL OBSTRUCTION
	NEW MECHANICAL LOUVER IN EXISTING WINDOW OPENING
	EXISTING BRICK INFILL
	NEW BRICK INFILL IN EXISTING WINDOW OPENING
	EXISTING CAST IRON DECORATIVE BALCONY

KEY PLAN

SCALE: N.T.S.

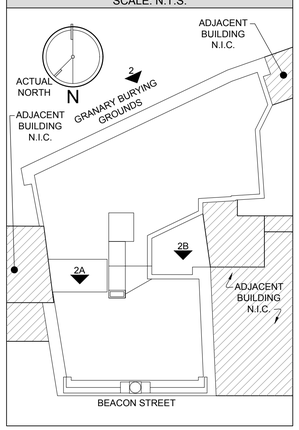

WESSLING ARCHITECTS
AIA-CSI-BOCA
PRESIDENTS PLACE, 1250 HANCOCK STREET, SUITE 815N
QUINCY, MA 02169 TEL. 617-773-8150 FAX 617-773-4902
www.wesslingarchitects.com

CONSULTANTS:

PROJECT:

HISTORIC FACADE RESTORATION

14 BEACON STREET
BOSTON, MA 02108

CLIENT:

FAROS PROPERTIES

20 ASHBURTON PLACE, 2ND FLOOR
BOSTON, MA 02108

NOT FOR CONSTRUCTION

PROFESSIONAL

PREPARED BY A LICENSED ARCHITECT
Any changes to this item can be a violation of the law unless altered by a licensed architect. Any alteration made to this item must be accompanied by a specific description of change or changes made; date change was made, as well as the seal of the licensed architect who made or oversaw the changes.

MARK	DATE	DESCRIPTION
	04-25-18	HISTORIC REVIEW SUBMISSION

ISSUE:

PROJECT NO.:	18034
DRAWN BY:	LAW / PON
CHECKED BY:	JSG
DRAWING SCALE:	AS NOTED

SHEET TITLE:

PROPOSED SOUTH ELEVATIONS

SHEET:

A-206

DO NOT SCALE DRAWING

COPYRIGHT©STEPHEN J. WESSLING ARCHITECTS INC. 2018

Drawing name: U:_Jobs\18034 14 beacon st\05-construction documents\architecture\Arch\CAD\14 beacon street exterior restoration\Sheets\18034 A-206 Proposed South Elevations.dwg
Apr 25, 2018 - 15:51pm
Xref:L:_Jobs\18034 14 BEACON ST\05-Construction Documents\Architecture\Arch\14 Beacon Street Exterior Restoration\18034_Site Plan Block 2018.dwg
Xref:L:_Jobs\18034 14 BEACON ST\05-Construction Documents\Architecture\Arch\14 Beacon Street Exterior Restoration\18034_24x36 Title Block.dwg
Xref:L:_Jobs\18034 14 beacon st\05-construction documents\architecture\arch\14 beacon street exterior restoration\Views\18034_Keynotes.dwg
Xref:L:_Jobs\18034 14 beacon st\05-construction documents\architecture\arch\14 beacon street exterior restoration\Views\18034_Legends.dwg

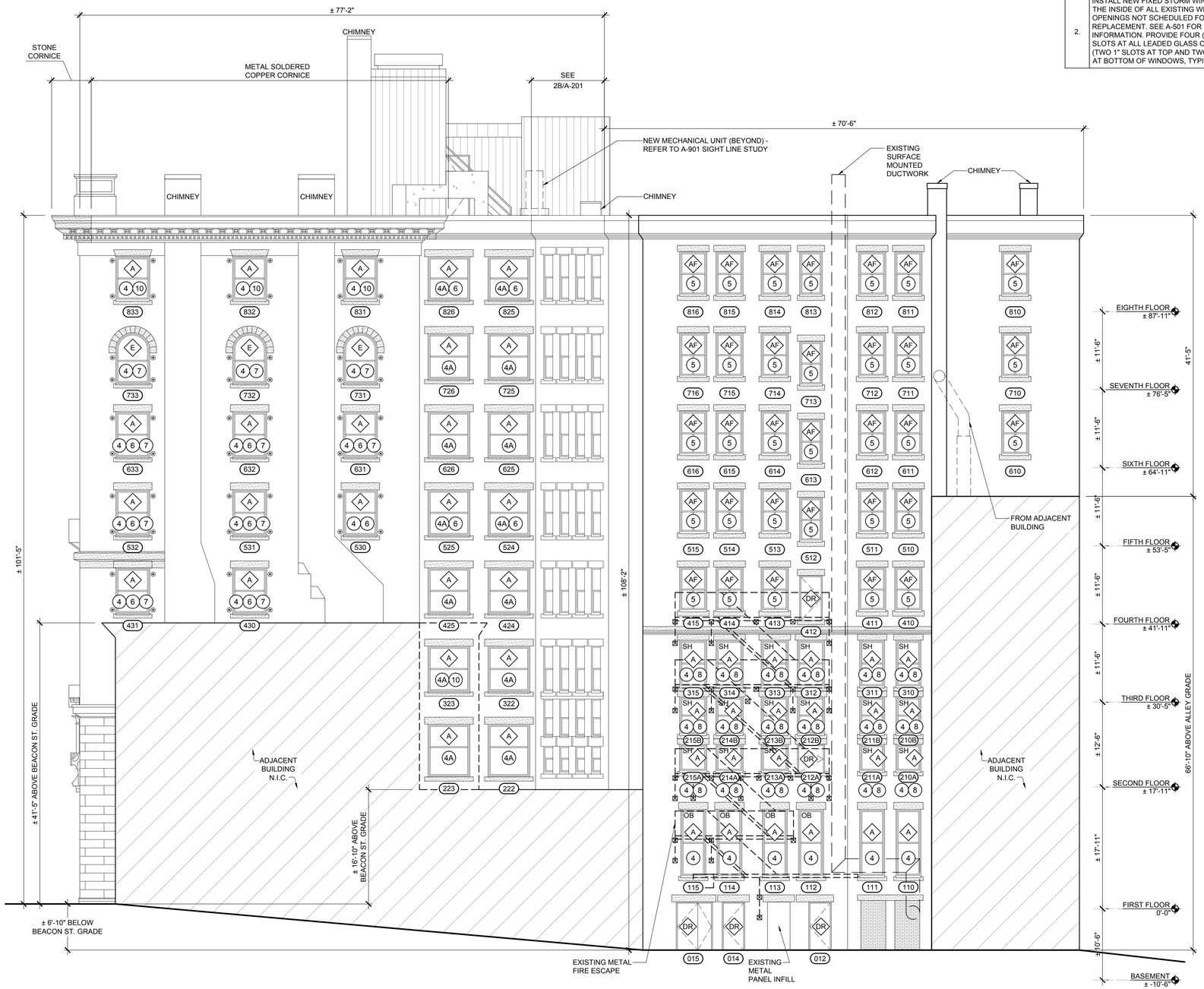

1 WEST ELEVATION
1/8"=1'-0"

GENERAL WORK NOTES

1.	REMOVE AND REPLACE ALL WINDOW PERIMETER SEALANTS.
2.	INSTALL NEW FIXED STORM WINDOWS AT THE INSIDE OF ALL EXISTING WINDOW OPENINGS NOT SCHEDULED FOR REPLACEMENT. SEE A-501 FOR MORE INFORMATION. PROVIDE FOUR (4) VENT SLOTS AT ALL LEADED GLASS OPENINGS (TWO 1" SLOTS AT TOP AND TWO 1" SLOTS AT BOTTOM OF WINDOWS, TYPICAL).

PROPOSED WORK NOTES

NOTE: REFER TO WINDOW SCHEDULE FOR SPECIFIC WORK ITEMS FOR EACH OPENING.

1	REFINISH - REGLAZE AND REPAINT.
2	RESTORE EXISTING SASH, FRAME, AND HARDWARE.
3	REPLICATE ONE OR BOTH SASH DETERIORATED BEYOND BEING RESTORED.
4	REPLACE EXISTING WINDOW SASH WITH NEW WOOD SASH - MARVIN MAGNUM SINGLE HUNG TILT PAC - REFER TO SHEET A-502.
4A	REPLACE EXISTING WINDOW WITH NEW WOOD WINDOW AND FRAME - JB PROPER BOSTONIAN - REFER TO SHEET A-503.
5	REPLACE EXISITNG WINDOW AND FRAME WITH NEW ALUMINUM WINDOW - REFER TO SHEET A-505.
6	REPLACE WOOD SILL TO MATCH EXISTING.
7	REPLACE WOOD BRICK MOULD OR TRIM TO MATCH EXISTING.
8	MAINTAIN EXISTING SHUTTERS OR REPLACE IN KIND.
9	REPLACE DOOR.
10	REPLACE INTERIOR TRIM.
11	REMOVE EXISTING WINDOW AND INSTALL NEW BRICK MASONRY INFILL - SET BACK 4" FROM FACE OF WALL.
12	REMOVE EXISTING WINDOW AND INSTALL NEW MECHANICAL LOUVER IN OPENING.

ELEVATIONS LEGEND

	BRICK MASONRY UNITS
	STONE
	STONE MORTAR JOINTS
	PARTITION WALL OBSTRUCTION
	NEW MECHANICAL LOUVER IN EXISTING WINDOW OPENING
	EXISTING BRICK INFILL
	NEW BRICK INFILL IN EXISTING WINDOW OPENING
	EXISTING CAST IRON DECORATIVE BALCONY
	EXISTING SHUTTER PINTLE

KEY PLAN

SCALE: N.T.S.

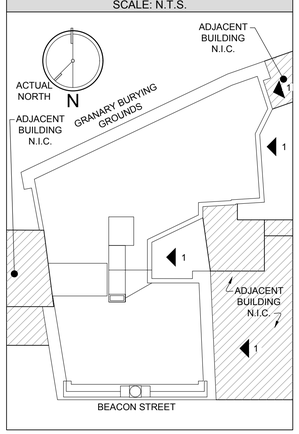

WESSLING ARCHITECTS
AIA-CSI-BOCA
PRESIDENTS PLACE, 1250 HANCOCK STREET, SUITE 815N
QUINCY, MA 02169 TEL. 617-773-8150 FAX 617-773-4902
www.wesslingarchitects.com

CONSULTANTS:

PROJECT:

HISTORIC FACADE RESTORATION

14 BEACON STREET
BOSTON, MA 02108

CLIENT:

FAROS PROPERTIES

20 ASHBURTON PLACE, 2ND FLOOR
BOSTON, MA 02108

NOT FOR CONSTRUCTION

PROFESSIONAL

PREPARED BY A LICENSED ARCHITECT
Any changes to this item can be a violation of the law unless altered by a licensed architect. Any alteration made to this item must be accompanied by a specific description of change or changes made; date change was made, as well as the seal of the licensed architect who made or oversaw the changes.

MARK	DATE	DESCRIPTION
	04-25-18	HISTORIC REVIEW SUBMISSION

ISSUE:

PROJECT NO.:	18034
DRAWN BY:	LAW / PON
CHECKED BY:	JSG
DRAWING SCALE:	AS NOTED

SHEET TITLE:

PROPOSED WEST ELEVATION

SHEET:

A-207

DO NOT SCALE DRAWING

COPYRIGHT©STEPHEN J. WESSLING ARCHITECTS INC. 2018

Drawing name: J:_SJW2018\18034 14 beacon st\50-construction documents\architectural\acad\CAD\14 beacon street exterior restoration\Sheet\18034 A-207 Proposed West Elevation.dwg
Apr 25, 2018 - 11:51pm
Xref L:_SJW2018\18034 14 BEACON STREET\50-Construction Documents\Architectural\acad\CAD\14 Beacon Street Exterior Restoration\18034_A-AxDt Title Block 2018.dwg
Xref L:_SJW2018\18034 14 beacon st\50-construction documents\architectural\acad\14 beacon street exterior restoration\Sheet\18034_A-Xref Plan.dwg
Xref L:_SJW2018\18034 14 beacon st\50-construction documents\architectural\acad\14 beacon street exterior restoration\Xrefs\18034_Keynotes.dwg
Xref L:_SJW2018\18034 14 beacon st\50-construction documents\architectural\acad\14 beacon street exterior restoration\Xrefs\18034_Legends.dwg

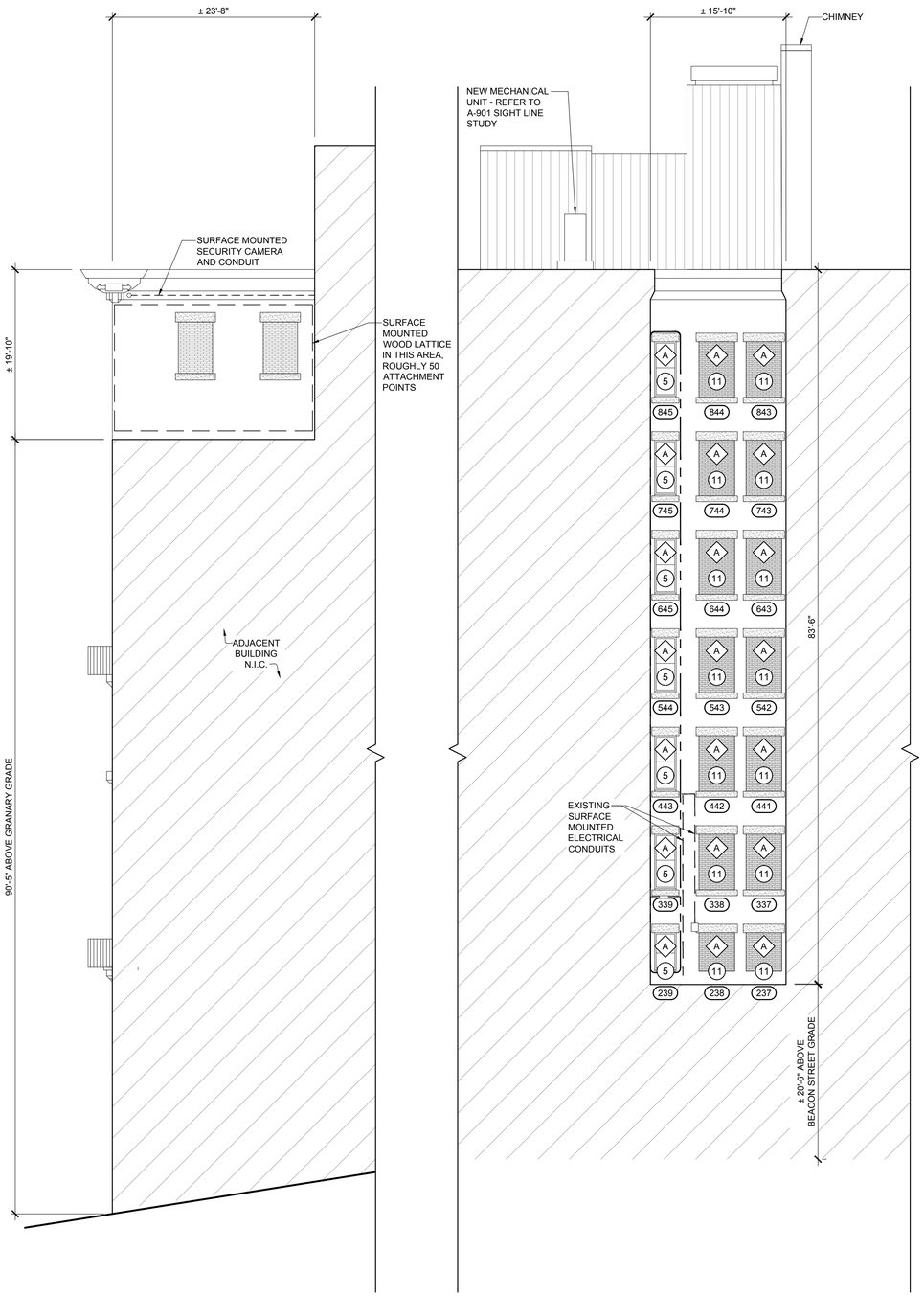

1B EAST ELEVATION
1/8"=1'-0"

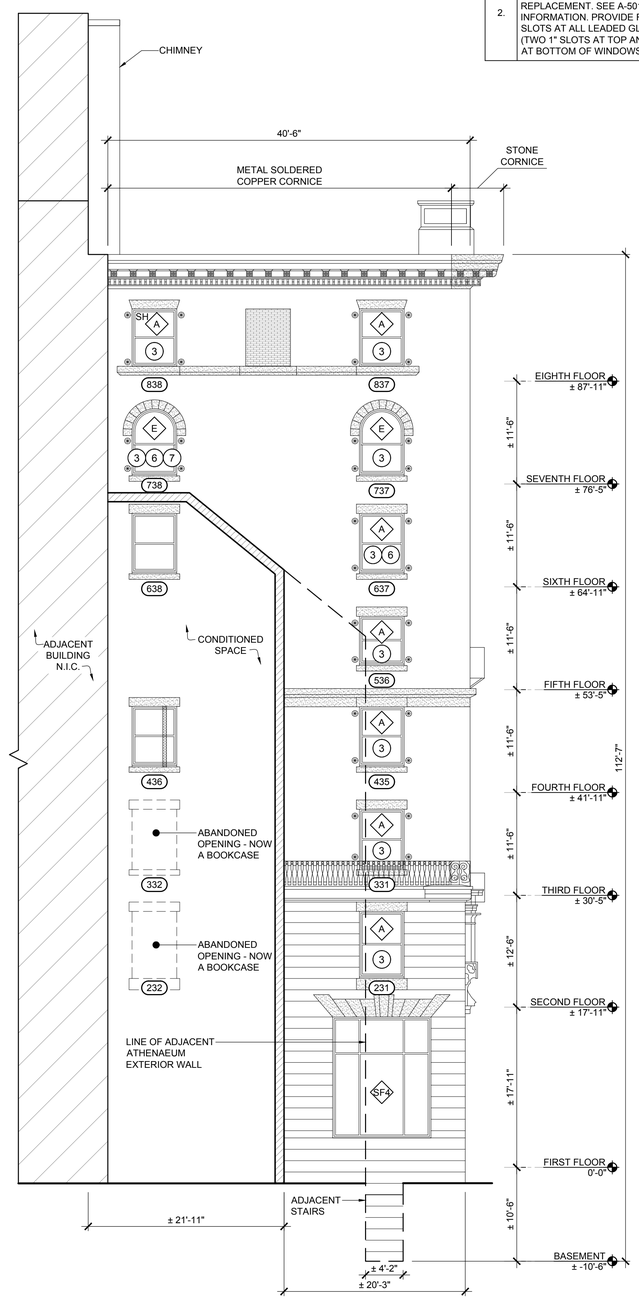

1A EAST ELEVATION
1/8"=1'-0"

GENERAL WORK NOTES

1.	REMOVE AND REPLACE ALL WINDOW PERIMETER SEALANTS.
2.	INSTALL NEW FIXED STORM WINDOWS AT THE INSIDE OF ALL EXISTING WINDOW OPENINGS NOT SCHEDULED FOR REPLACEMENT. SEE A-501 FOR MORE INFORMATION. PROVIDE FOUR (4) VENT SLOTS AT ALL LEADED GLASS OPENINGS (TWO 1" SLOTS AT TOP AND TWO 1" SLOTS AT BOTTOM OF WINDOWS, TYPICAL).

PROPOSED WORK NOTES

NOTE: REFER TO WINDOW SCHEDULE FOR SPECIFIC WORK ITEMS FOR EACH OPENING.

1	REFINISH - REGLAZE AND REPAINT.
2	RESTORE EXISTING SASH, FRAME, AND HARDWARE.
3	REPLICATE ONE OR BOTH SASH DETERIORATED BEYOND BEING RESTORED.
4	REPLACE EXISTING WINDOW SASH WITH NEW WOOD SASH - MARVIN MAGNUM SINGLE HUNG TILT PAC - REFER TO SHEET A-502.
4A	REPLACE EXISTING WINDOW WITH NEW WOOD WINDOW AND FRAME - JB PROPER BOSTONIAN - REFER TO SHEET A-503.
5	REPLACE EXISITNG WINDOW AND FRAME WITH NEW ALUMINUM WINDOW - REFER TO SHEET A-505.
6	REPLACE WOOD SILL TO MATCH EXISTING.
7	REPLACE WOOD BRICK MOULD OR TRIM TO MATCH EXISTING.
8	MAINTAIN EXISTING SHUTTERS OR REPLACE IN KIND.
9	REPLACE DOOR.
10	REPLACE INTERIOR TRIM.
11	REMOVE EXISTING WINDOW AND INSTALL NEW BRICK MASONRY INFILL - SET BACK 4" FROM FACE OF WALL.
12	REMOVE EXISTING WINDOW AND INSTALL NEW MECHANICAL LOUVER IN OPENING.

ELEVATIONS LEGEND

	BRICK MASONRY UNITS
	STONE
	STONE MORTAR JOINTS
	PARTITION WALL OBSTRUCTION
	NEW MECHANICAL LOUVER IN EXISTING WINDOW OPENING
	EXISTING BRICK INFILL
	NEW BRICK INFILL IN EXISTING WINDOW OPENING
	EXISTING CAST IRON DECORATIVE BALCONY
	EXISTING SHUTTER PINTLE

KEY PLAN

SCALE: N.T.S.

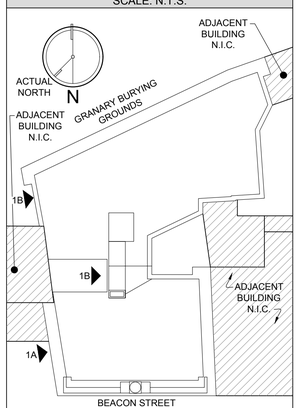

WESSLING ARCHITECTS
AIA-CSI-BOCA
PRESIDENTS PLACE, 1250 HANCOCK STREET, SUITE 815N
QUINCY, MA 02169 TEL. 617-773-8150 FAX 617-773-4902
www.wesslingarchitects.com

CONSULTANTS:

PROJECT:

HISTORIC FACADE RESTORATION

14 BEACON STREET
BOSTON, MA 02108

CLIENT:

FAROS PROPERTIES

20 ASHBURTON PLACE, 2ND FLOOR
BOSTON, MA 02108

NOT FOR CONSTRUCTION

PROFESSIONAL

PREPARED BY A LICENSED ARCHITECT
Any changes to this item can be a violation of the law unless altered by a licensed architect. Any alteration made to this item must be accompanied by a specific description of change or changes made; date change was made, as well as the seal of the licensed architect who made or oversaw the changes.

MARK	DATE	DESCRIPTION
	04-25-18	HISTORIC REVIEW SUBMISSION

ISSUE:

PROJECT NO.:	18034
DRAWN BY:	LAW / PON
CHECKED BY:	JSG
DRAWING SCALE:	AS NOTED

SHEET TITLE:

PROPOSED EAST ELEVATIONS

SHEET:

A-208

DO NOT SCALE DRAWING

COPYRIGHT©STEPHEN J. WESSLING ARCHITECTS INC. 2018

Drawing name: U:_\p\2018\18034 14 beacon st\50-construction documents\architecture\Autu\CAD\14 beacon street exterior restoration\Sheets\18034 A-208 Proposed East Elevations.dwg
Apr 25, 2018 - 15:51pm
Xref(s): U:\p\2018\18034 14 BEACON CORP\50-Construction Documents\Architecture\Xrefs\18034 Beacon Street Exterior Restoration\18034_Site Plan Block 2018.dwg
U:\p\2018\18034 14 BEACON CORP\50-Construction Documents\Architecture\Xrefs\18034 Beacon Street Exterior Restoration\18034_Elevations.dwg
U:\p\2018\18034 14 beacon st\50-construction documents\architecture\autu\cad\14 beacon street exterior restoration\Views\18034_Keyplate.dwg
U:\p\2018\18034 14 beacon st\50-construction documents\architecture\autu\cad\14 beacon street exterior restoration\Views\18034_Layout-Plan.dwg

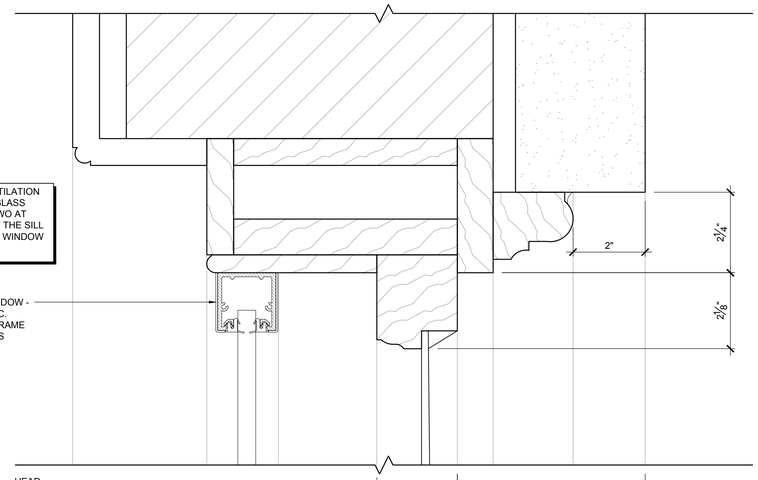

HEAD

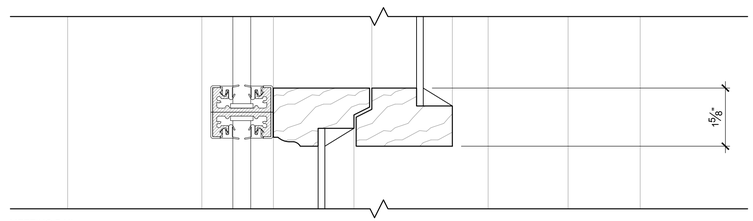

MEETING RAIL

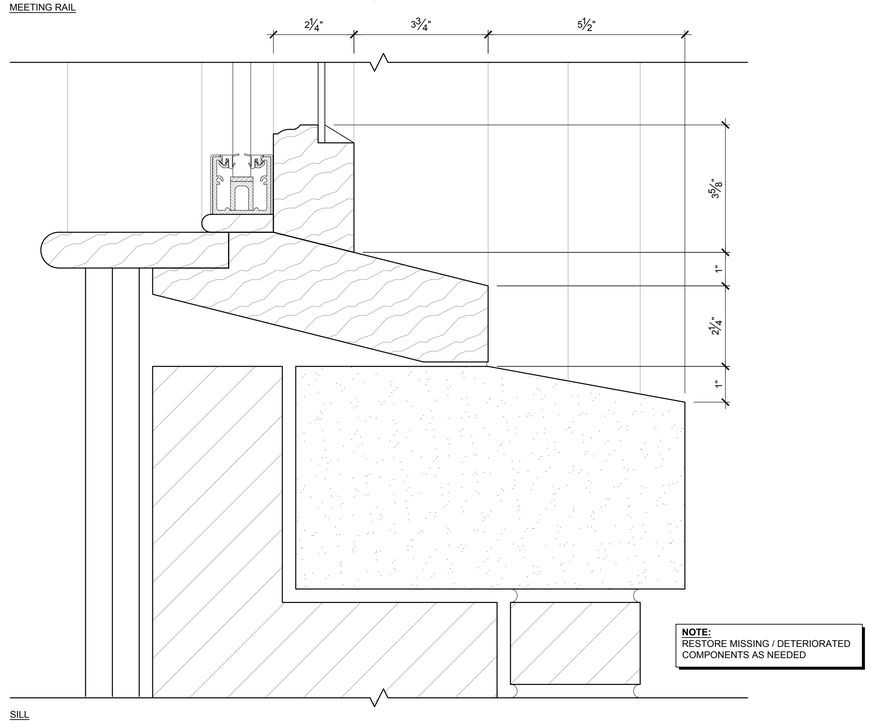

SILL

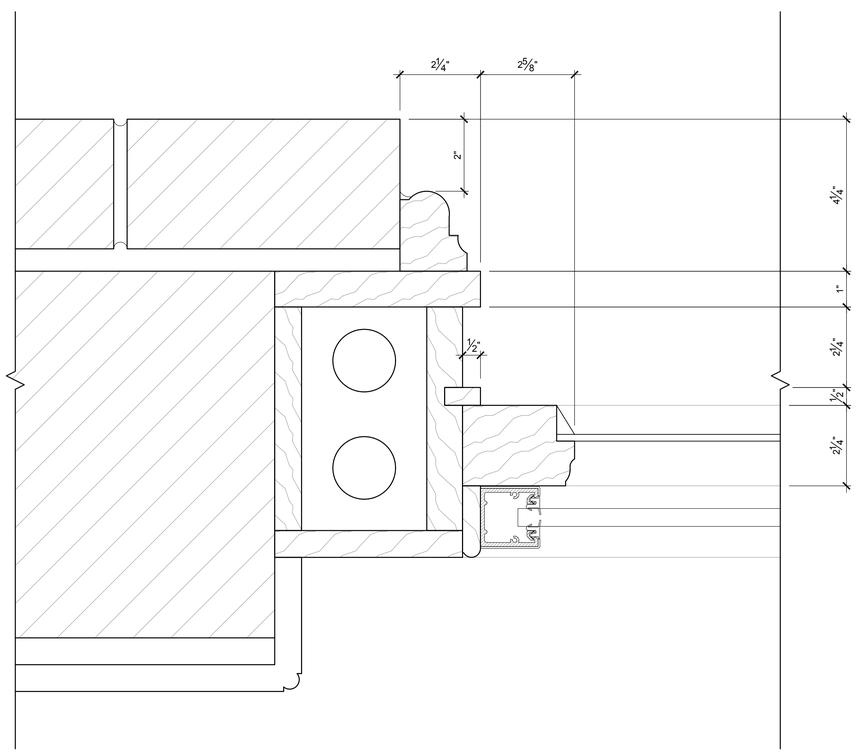

JAMB

1 EXISTING WOOD WINDOW DETAILS

6"=1'-0"

WESSLING ARCHITECTS
AIA-CSI-BOCA
PRESIDENTS PLACE, 1250 HANCOCK STREET, SUITE 815N
QUINCY, MA 02169 TEL. 617-773-8150 FAX 617-773-4902
www.wesslingarchitects.com

CONSULTANTS:

PROJECT:

HISTORIC FACADE RESTORATION

14 BEACON STREET
BOSTON, MA 02108

CLIENT:

FAROS PROPERTIES

20 ASHBURTON PLACE, 2ND FLOOR
BOSTON, MA 02108

NOT FOR CONSTRUCTION

PROFESSIONAL

PREPARED BY A LICENSED ARCHITECT
Any changes to this item can be a violation of the law unless altered by a licensed architect. Any alteration made to this item must be accompanied by a specific description of change or changes made; date change was made, as well as the seal of the licensed architect who made or oversaw the changes.

MARK	DATE	DESCRIPTION
	04-25-18	HISTORIC REVIEW SUBMISSION

ISSUE:

PROJECT NO.:	18034
DRAWN BY:	LAW
CHECKED BY:	SAW
DRAWING SCALE:	6"=1'-0"

SHEET TITLE:

EXISTING WOOD WINDOW DETAILS

SHEET:

A-501

DO NOT SCALE DRAWING

COPYRIGHT©STEPHEN J. WESSLING ARCHITECTS INC. 2018

Drawing name: J:_SAP2018\18034 14 beacon st\Bc-construction documents\architecture\Arch\CAD\14 beacon street exterior restoration\Sheets\18034 A-501 Window Details.dwg
Apr 25, 2018 - 15:51pm
Xref: J:_SAP2018\18034 14 BEACON\Bc-Construction Documents\Architecture\Arch\14 Beacon Street Exterior Restoration\18034_24x36 Title Block 2018.dwg
Xref: J:_SAP2018\18034 14 beacon st\Bc-construction documents\architecture\Arch\14 beacon street exterior restoration\18034 XR Window Details.dwg

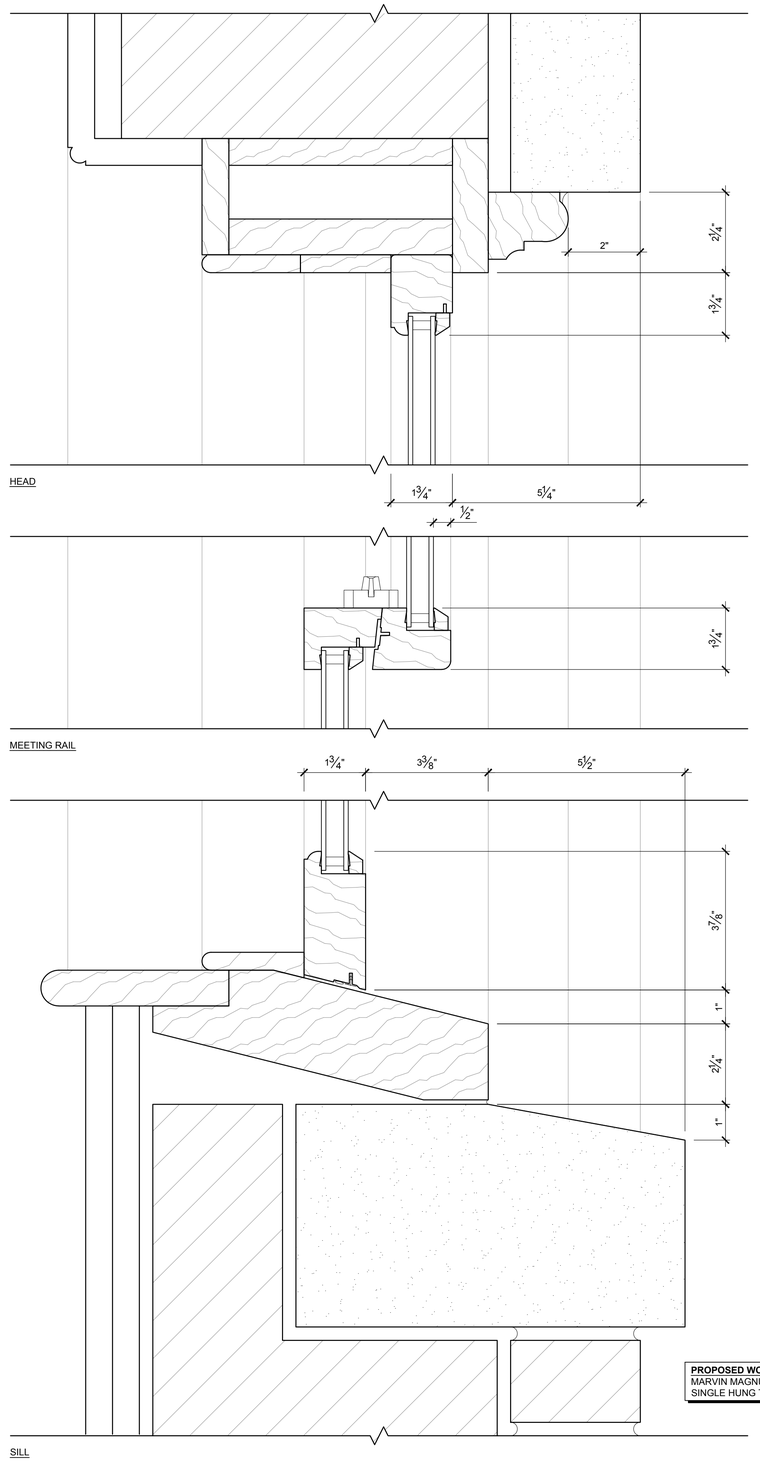

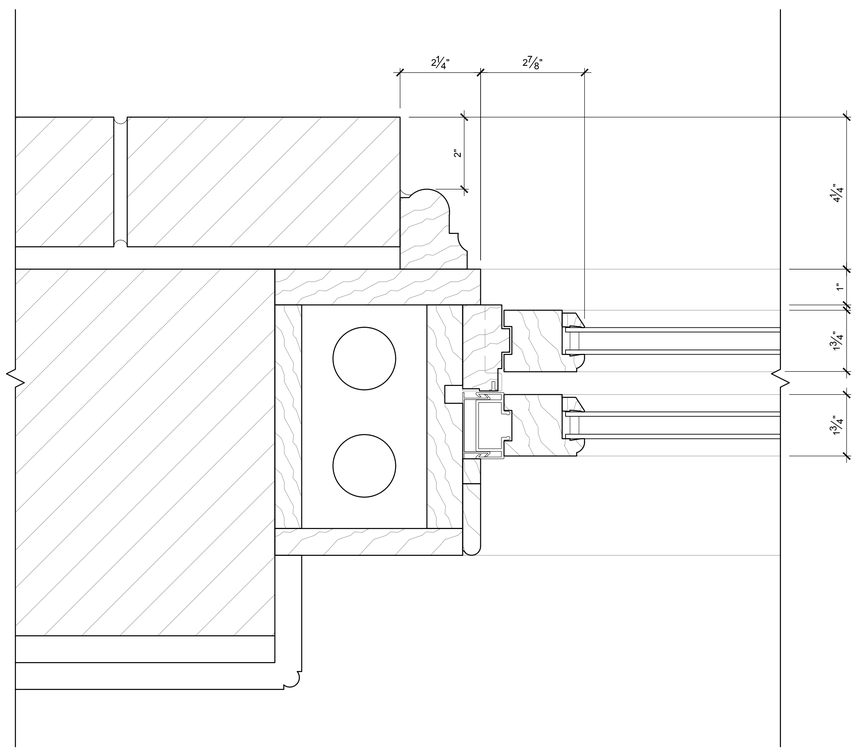

PROPOSED WOOD WINDOW:
MARVIN MAGNUM
SINGLE HUNG TILT PAC

1 PROPOSED WOOD WINDOW DETAILS
6"=1'-0"

WESSLING ARCHITECTS
AIA-CSI-BOCA
PRESIDENTS PLACE, 1250 HANCOCK STREET, SUITE 815N
QUINCY, MA 02169 TEL. 617-773-8150 FAX 617-773-4902
www.wesslingarchitects.com

CONSULTANTS:

PROJECT:

HISTORIC FACADE RESTORATION

14 BEACON STREET
BOSTON, MA 02108

CLIENT:

FAROS PROPERTIES

20 ASHBURTON PLACE, 2ND FLOOR
BOSTON, MA 02108

NOT FOR CONSTRUCTION

PROFESSIONAL

PREPARED BY A LICENSED ARCHITECT
Any changes to this item can be a violation of the law unless altered by a licensed architect. Any alteration made to this item must be accompanied by a specific description of change or changes made; date change was made, as well as the seal of the licensed architect who made or oversaw the changes.

MARK	DATE	DESCRIPTION
	04-25-18	HISTORIC REVIEW SUBMISSION

ISSUE:

PROJECT NO.:	18034
DRAWN BY:	LAW
CHECKED BY:	SAW
DRAWING SCALE:	6"=1'-0"

SHEET TITLE:

PROPOSED WOOD WINDOWS DETAILS

SHEET:

A-502

DO NOT SCALE DRAWING

COPYRIGHT©STEPHEN J. WESSLING ARCHITECTS INC. 2018

Drawing name: J:_SAP2018\18034 14 beacon st\Bc-construction documents\architectural\AutoCAD\14 beacon street exterior restoration\Sheets\18034 A-502 Proposed Window Details.dwg
Apr 25, 2018 - 15:51pm
Xref: J:_SAP2018\18034 14 BEACON ST\04-Construction Documents\Architectural\14-20-24 Beacon Street Exterior Restoration\18034_24-26 Title Block 2018.dwg
Xref: J:_SAP2018\18034 14 beacon st\Bc-construction documents\Mechanical\14 beacon street mechanical\18034_Mechanical Title Block 2018.dwg

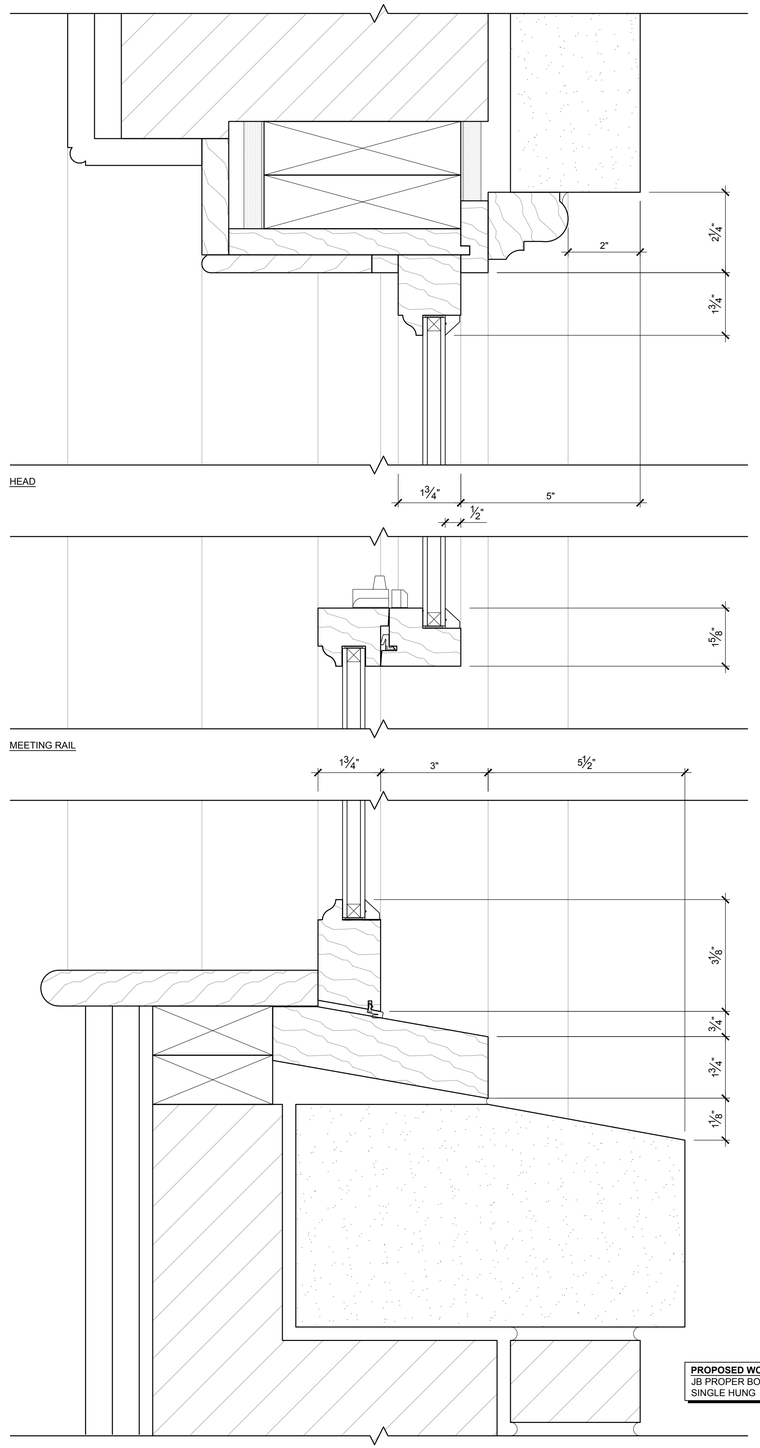

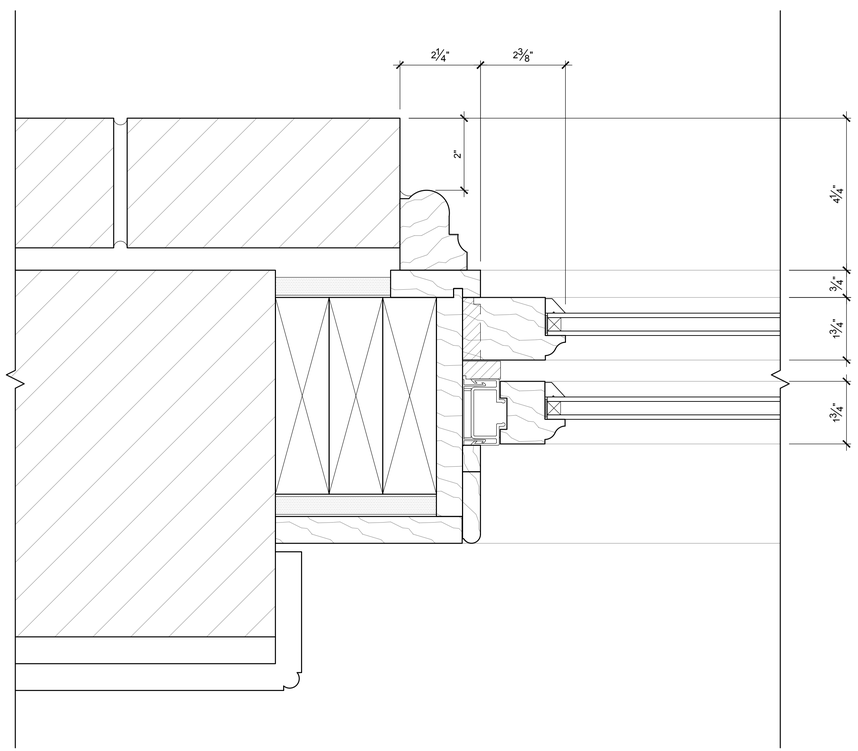

JAMB

PROPOSED WOOD WINDOW:
JB PROPER BOSTONIAN
SINGLE HUNG

1 PROPOSED WOOD WINDOW DETAILS
6"=1'-0"

WESSLING ARCHITECTS
AIA-CSI-BOCA

PRESIDENTS PLACE, 1250 HANCOCK STREET, SUITE 815N
QUINCY, MA 02169 TEL. 617-773-8150 FAX 617-773-4902
www.wesslingarchitects.com

CONSULTANTS:

PROJECT:

HISTORIC FACADE RESTORATION

14 BEACON STREET
BOSTON, MA 02108

CLIENT:

FAROS PROPERTIES

20 ASHBURTON PLACE, 2ND FLOOR
BOSTON, MA 02108

NOT FOR CONSTRUCTION

PROFESSIONAL

PREPARED BY A LICENSED ARCHITECT
Any changes to this item can be a violation of the law unless altered by a licensed architect. Any alteration made to this item must be accompanied by a specific description of change or changes made; date change was made, as well as the seal of the licensed architect who made or oversaw the changes.

MARK	DATE	DESCRIPTION
	04-25-18	HISTORIC REVIEW SUBMISSION

ISSUE:

PROJECT NO.:	18034
DRAWN BY:	LAW
CHECKED BY:	SAW
DRAWING SCALE:	6"=1'-0"

SHEET TITLE:

PROPOSED WOOD WINDOWS DETAILS

SHEET:

A-503

DO NOT SCALE DRAWING

COPYRIGHT©STEPHEN J. WESSLING ARCHITECTS INC. 2018

Drawing name: L:\SAW\2018\18034 14 beacon st\DD construction documents\architecture\Arch\ACH\14 beacon street exterior restoration\Sheets\18034 A-503 Proposed Window Details.dwg
Apr 26, 2018 - 10:51pm
Xref: L:\SAW\2018\18034 14 BEACON STREET\DD Construction Documents\Architecture\Arch\ACH\14 Beacon Street Exterior Restoration\18034_2A39 Title Block 2018.dwg
Xref: L:\SAW\2018\18034 14 Beacon st\DD construction documents\Architecture\Arch\ACH\14 Beacon Street Exterior Restoration\18034_Xref Title Block 2018.dwg

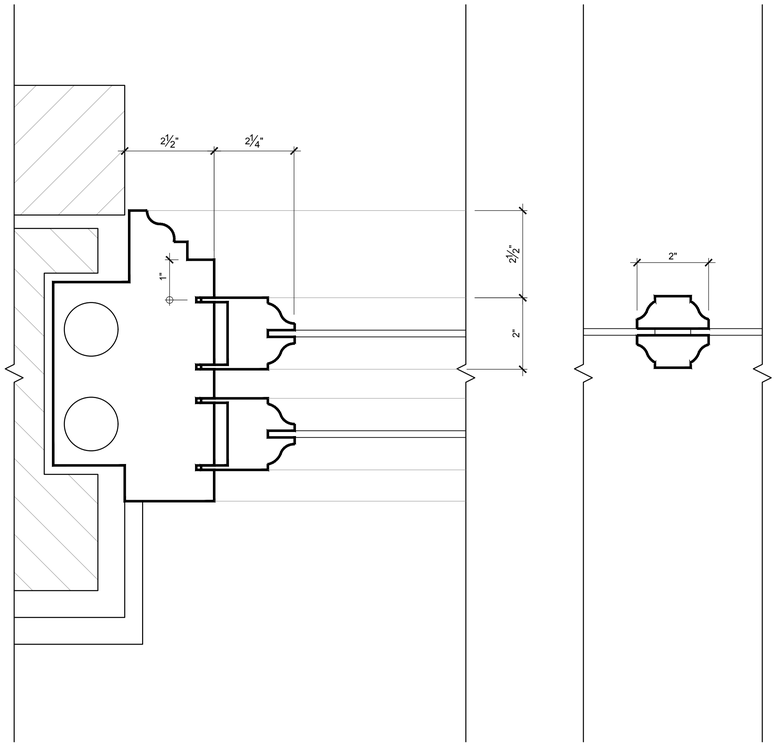

JAMB

VERTICAL MULLION

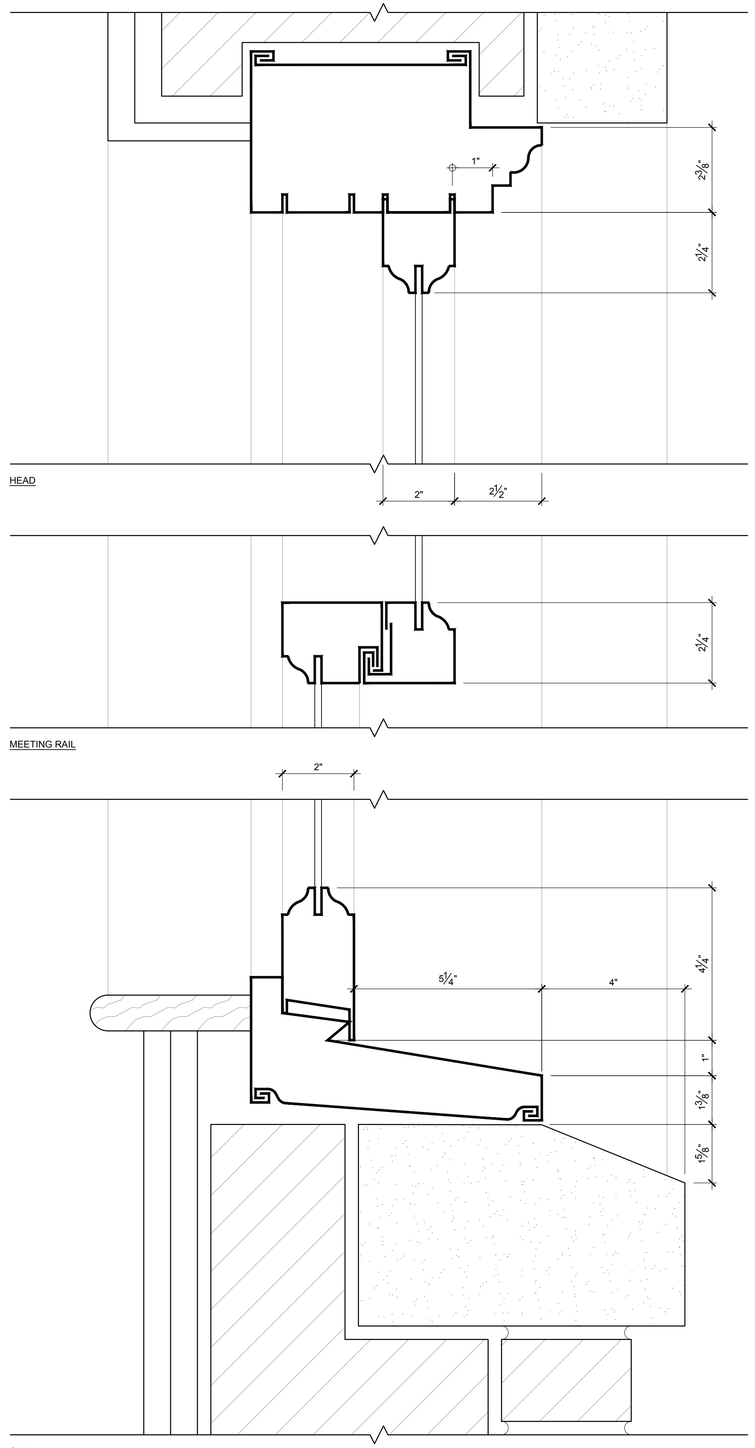

HEAD

MEETING RAIL

SILL

1 EXISTING METAL WINDOW DETAILS

6"=1'-0"

WESSLING ARCHITECTS
AIA-CSI-BOCA

PRESIDENTS PLACE, 1250 HANCOCK STREET, SUITE 815N
QUINCY, MA 02169 TEL. 617-773-8150 FAX 617-773-4902
www.wesslingarchitects.com

CONSULTANTS:

PROJECT:

HISTORIC FACADE RESTORATION

14 BEACON STREET
BOSTON, MA 02108

CLIENT:

FAROS PROPERTIES

20 ASHBURTON PLACE, 2ND FLOOR
BOSTON, MA 02108

NOT FOR CONSTRUCTION

PROFESSIONAL

PREPARED BY A LICENSED ARCHITECT
Any changes to this item can be a violation of the law unless altered by a licensed architect. Any alteration made to this item must be accompanied by a specific description of change or changes made; date change was made, as well as the seal of the licensed architect who made or oversaw the changes.

MARK	DATE	DESCRIPTION
	04-25-18	HISTORIC REVIEW SUBMISSION

ISSUE:

PROJECT NO.:	18034
DRAWN BY:	LAW
CHECKED BY:	SAW
DRAWING SCALE:	6"=1'-0"

SHEET TITLE:

EXISTING METAL WINDOW DETAILS

SHEET:

A-504

DO NOT SCALE DRAWING

COPYRIGHT©STEPHEN J. WESSLING ARCHITECTS INC. 2018

Drawing name: J:_SAP2018\18034 14 beacon st\50-construction documents\architectural\Auto\A2-14 beacon street exterior restoration\Sheets\18034 A-504 Window Details.dwg
Apr 26, 2018 - 10:51pm
Xref: J:_SAP2018\18034 14 BEACON STREET\00-Construction Documents\Architectural\Auto\A2-14 Beacon Street Exterior Restoration\18034_Auto_Title Block 2018.dwg
Xref: J:_SAP2018\18034 14 Beacon st\00-construction documents\Architectural\Auto\A2-14 Beacon Street Exterior Restoration\18034_Xref_Sheet Title Block.dwg

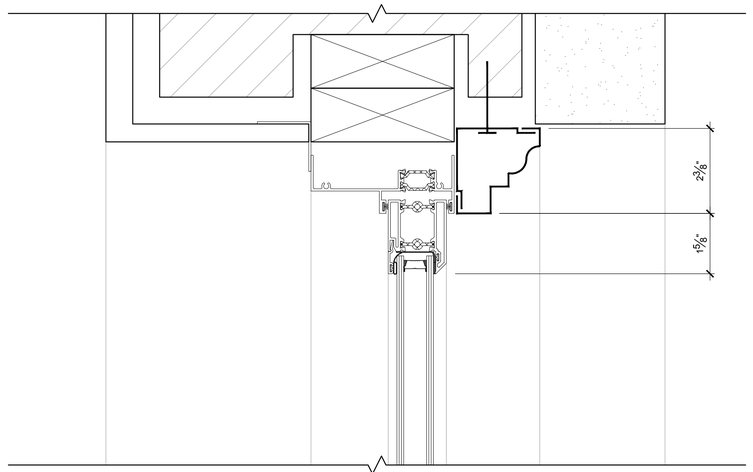

HEAD

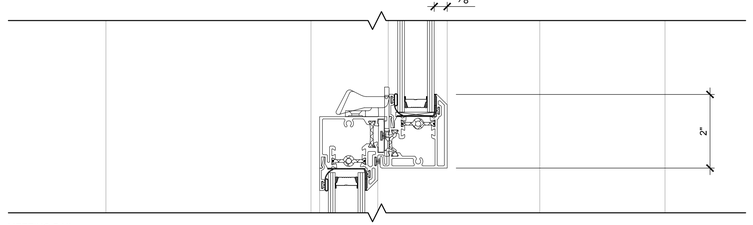

MEETING RAIL

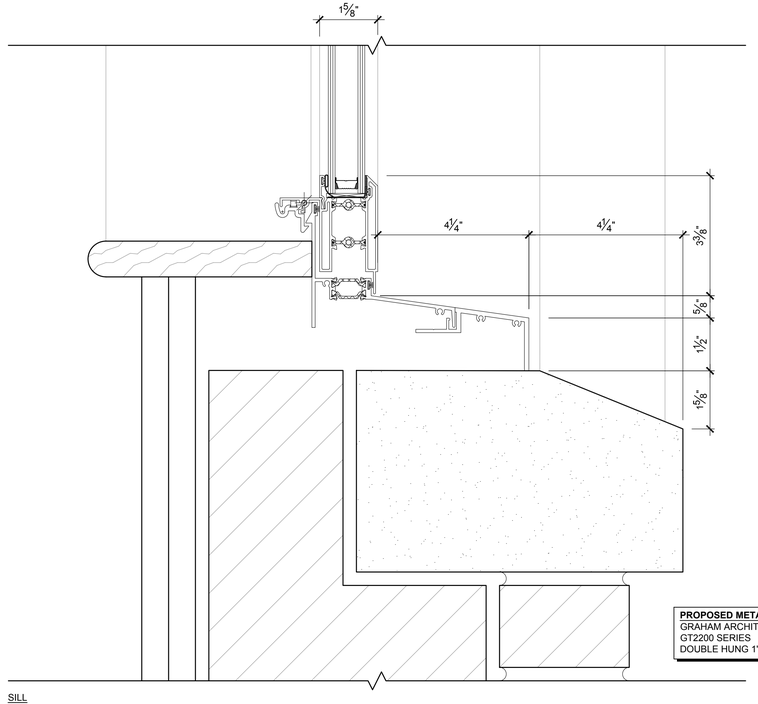

PROPOSED METAL WINDOW:
GRAHAM ARCHITECTURAL PRODUCTS
GT2200 SERIES
DOUBLE HUNG 1" HISTORIC GLAZING

SILL

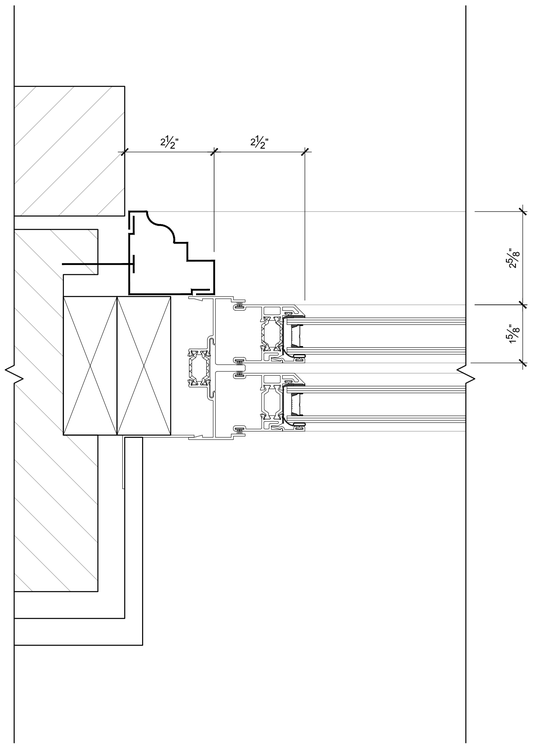

JAMB

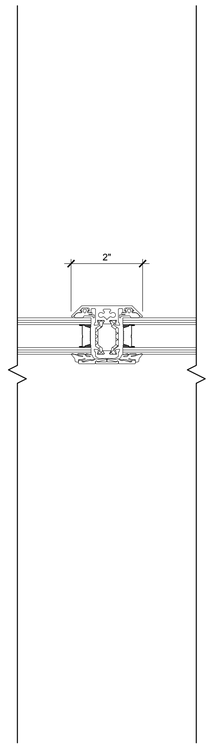

VERTICAL MULLION

1 PROPOSED METAL WINDOW DETAILS
6"=1'-0"

WESSLING ARCHITECTS
AIA-CSI-BOCA
PRESIDENTS PLACE, 1250 HANCOCK STREET, SUITE 815N
QUINCY, MA 02169 TEL. 617-773-8150 FAX 617-773-4902
www.wesslingarchitects.com

CONSULTANTS:

PROJECT:

HISTORIC FACADE RESTORATION

14 BEACON STREET
BOSTON, MA 02108

CLIENT:

FAROS PROPERTIES

20 ASHBURTON PLACE, 2ND FLOOR
BOSTON, MA 02108

NOT FOR CONSTRUCTION

PROFESSIONAL

PREPARED BY A LICENSED ARCHITECT
Any changes to this item can be a violation of the law unless altered by a licensed architect. Any alteration made to this item must be accompanied by a specific description of change or changes made; date change was made, as well as the seal of the licensed architect who made or oversaw the changes.

MARK	DATE	DESCRIPTION
	04-25-18	HISTORIC REVIEW SUBMISSION

ISSUE:

PROJECT NO.:	18034
DRAWN BY:	LAW
CHECKED BY:	SAW
DRAWING SCALE:	6"=1'-0"

SHEET TITLE:

PROPOSED METAL WINDOW DETAILS

SHEET:

A-505

DO NOT SCALE DRAWING

COPYRIGHT©STEPHEN J. WESSLING ARCHITECTS INC. 2018

Drawing name: U:\S2020\18\18034 14 beacon st\0-construction documents\architectural\AutoCAD\14 beacon street exterior restoration\Sheet\18034 A-505 Proposed Window Details.dwg
Apr 25, 2018 - 11:06pm
Xref: L:\Xrefs\18\18034 14 BEACON STREET-Construction Documents\Architectural\AutoCAD\14 Beacon Street Exterior Restoration\18034_A-000 Title Block 2018.dwg
Xref: L:\Xrefs\18\18034 14 BEACON STREET-Construction Documents\Architectural\AutoCAD\14 Beacon Street Exterior Restoration\18034_A-000 Title Block 2018.dwg

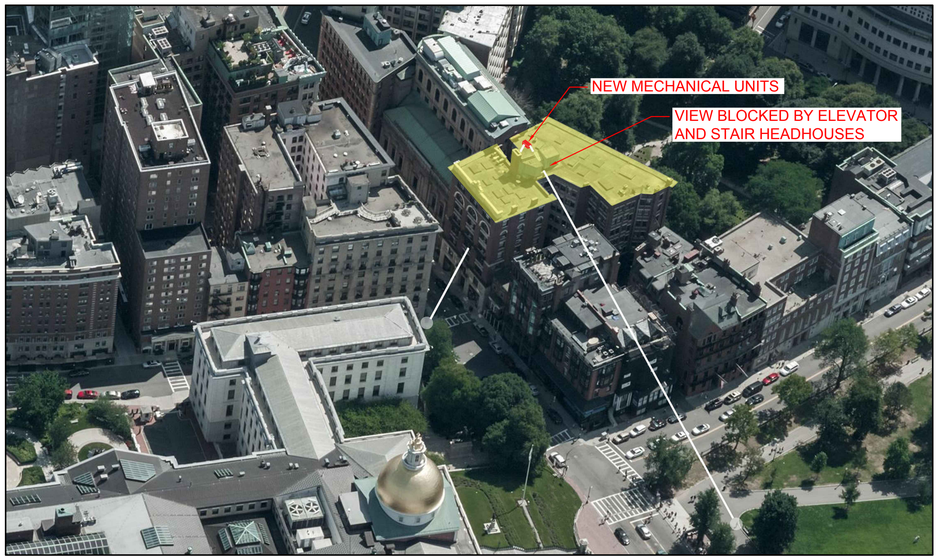

3 SIGHT LINE STUDY FROM BEACON ST. AND THE BOSTON COMMON
N.T.S.

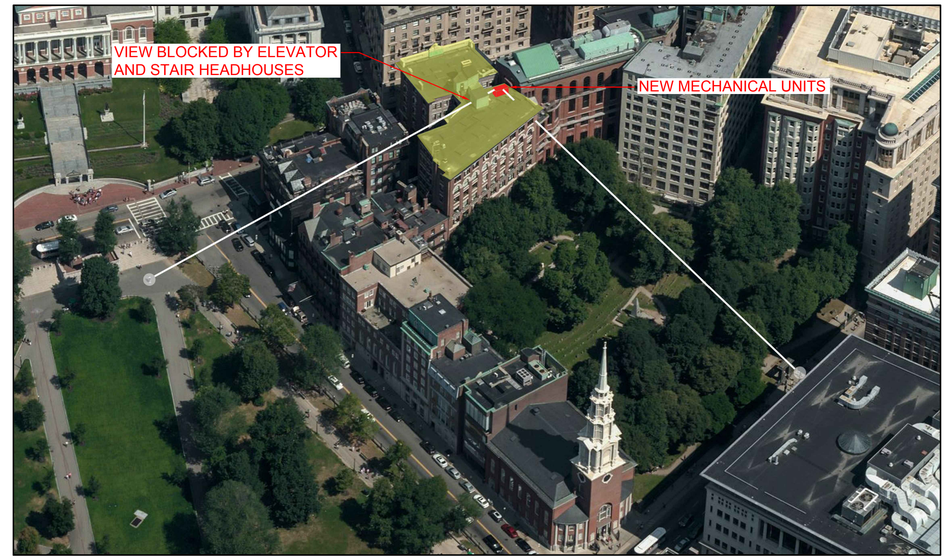

2 SIGHT LINE STUDY FROM TREMONT ST. AND THE BOSTON COMMON
N.T.S.

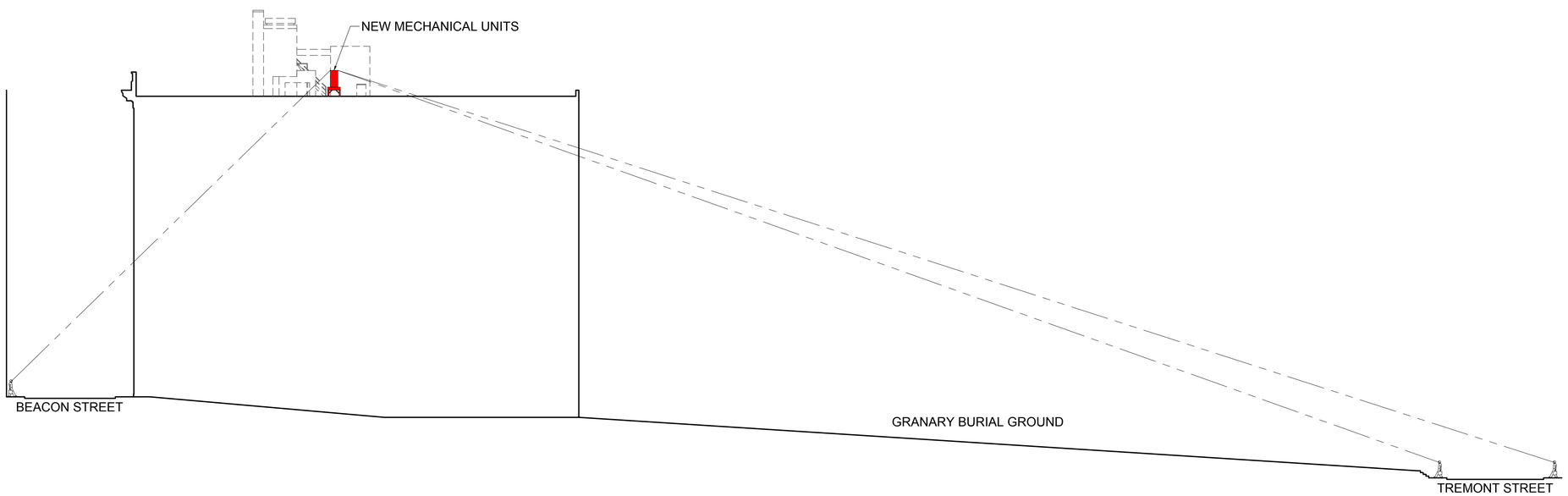

1 NORTH-SOUTH SECTION SIGHT LINE DIAGRAM - VIEWS FROM TREMONT ST. AND BEACON ST.
N.T.S.

WESSLING
ARCHITECTS
AIA-CSI-BOCA
PRESIDENTS PLACE, 1250 HANCOCK STREET, SUITE 815N
QUINCY, MA 02169 TEL. 617-773-8150 FAX 617-773-4902
www.wesslingarchitects.com

CONSULTANTS:

PROJECT:

HISTORIC FACADE RESTORATION

14 BEACON STREET
BOSTON, MA 02108

CLIENT:

FAROS PROPERTIES

20 ASHBURTON PLACE, 2ND FLOOR
BOSTON, MA 02108

NOT FOR CONSTRUCTION

PROFESSIONAL

PREPARED BY A LICENSED ARCHITECT
Any changes to this item can be a violation of the law unless altered by a licensed architect. Any alteration made to this item must be accompanied by a specific description of change or changes made; date change was made, as well as the seal of the licensed architect who made or oversaw the changes.

MARK	DATE	DESCRIPTION
	04-25-18	HISTORIC REVIEW SUBMISSION

ISSUE:

PROJECT NO.:	18034
DRAWN BY:	LAW
CHECKED BY:	SAW
DRAWING SCALE:	N.T.S.

SHEET TITLE:

SIGHT LINE STUDY

SHEET:

A-901

DO NOT SCALE DRAWING

COPYRIGHT©STEPHEN J. WESSLING ARCHITECTS INC. 2018

Drawing name: J:_SJW2018\18034 14 beacon st\50-construction documents\architectural\AutoCAD\14 beacon street exterior restoration\Sheets\18034 A-901 Sightline Study.dwg
Apr 25, 2018 - 10:51pm
Layout: A-901 Plotted by: LAW
Xref: J:_SJW2018\18034 14 BEACON ST\50-Construction Documents\Architectural\AutoCAD\14 Beacon Street Exterior Restoration\Sheets\18034 A-000 Title Block 2018.dwg
Xref: J:_SJW2018\18034 14 BEACON ST\50-Construction Documents\Architectural\AutoCAD\14 Beacon Street Exterior Restoration\Sheets\18034 A-001 Sightline Study.dwg